Rexroth
Bosch Group

# Frequency Converter Fe
# Economical converters for universal applications

**Bosch Rexroth AG**
dominates in all relevant drive, control and motion technologies worldwide. We offer vitally-important added value in electric drive and control systems – regardless of where you are located and what you want to automate!

# Frequency Converter Fe – Simple, scalable and economical

Frequency Converter Fe represents the new, economical line of converters from Control City – the control technology capital. Its compact dimensions allow these standard converters to cover the entire power range, from 0.75 kW to 160 kW. With exceptional value, easy operation and a wide variety of standard functions, Frequency Converter Fe sets new standards in its class.

**Simple**
Standardized mounting holes for all sizes facilitate installation in the control cabinet; screw-type terminals for all connections simplify wiring. All units are commissioned and operated in the same manner, since all frequency converters have a standardized, consistent firmware and menu structure. The integrated operating panel allows for quick data entry and diagnostics.

**Scalable**
Frequency Converter Fe covers the entire power range from 0.75 kW to 160 kW. Communication with a higher-level control takes place via ModBus or PROFIBUS (optional).

Two variants are offered to ensure optimal integration with your specific machine or plant: G-type – for applications requiring high overload capability (e.g. conveyor belts, agitators, or extruders) P-type – for applications requiring high durability (e.g. pumps, fans, or crushers/shredders)

**Economical**
Frequency Converter Fe was designed to be used as an OPEN LOOP application in harsh industrial environments. All circuit boards are coated with a thin layer of paint that protects the electronics from aggressive environmental factors such as dust or vapor and thus extends the service life of the units significantly. Every drive is tested under real-world conditions to ensure proper operation and safety prior to being shipped – this is Rexroth quality.

# Benefits that impress – Including in your industry

**Frequency Converter Fe offers you the following benefits:**

- additional peripheral units are no longer required thanks to an integrated operating panel for quick and easy start-up
- external brake units are also not required thanks to built-in brake chopper for units up to 15 kW
- long service life thanks to a coating that protects the circuit boards from damaging environmental factors
- substantial energy savings and longer service life of motor thanks to a freely definable V/F characteristic for load-dependent adaptation of voltage and frequency
- optimal efficiency and minimal operating noise thanks to fine adjustable pulse frequency
- no costs associated with supplementary communication thanks to easy synchronization of the frequency converters via an on-board digital I/O

**Exploit the benefits of Frequency Converter Fe in your industry:**

- building automation
- food processing and packaging machines
- general automation
- machine tools
- paper, printing, and processing machines
- plastic processing machines
- pump systems as well as environmental and process engineering
- textile machines
- transport, storage and materials handling technology
- ventilation and air conditioning systems
- woodworking machines

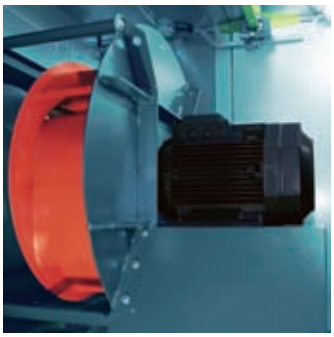

# Frequency Converter Fe – Easy to use

The integrated operating panel is all you need to quickly and easily operate Frequency Converter Fe. All parameters are entered using robust membrane keys. The 4-digit LED display shows all parameters in an easy-to-read format. The accompanying “Quick Start Guide” describes how to carry out parameterization step by step and explains the logic behind the menu structure.
The days of laborious commissioning are over and you don't even need a PC or an additional programming unit!
A PC and the engineering software can be used to configure multiple frequency converters with identical or similar parameterization data.
Simply create the configuration on the PC and transfer it to the number of Frequency Converter Fe units required via the serial RS485 interface.
Clear menu structures and intuitive operation were the primary goals to achieve in developing the software, which facilitates use of the application and accelerates the engineering process.

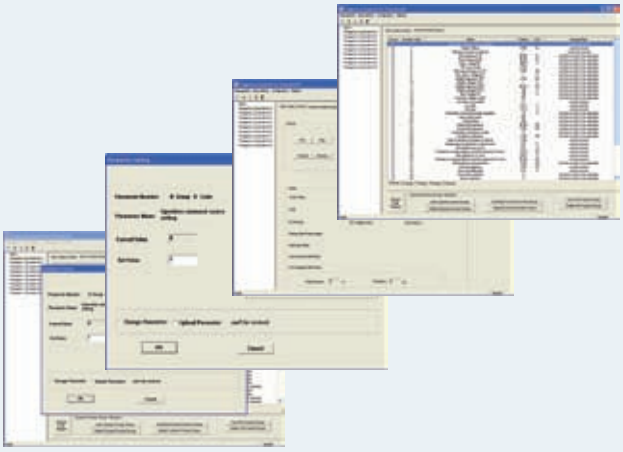

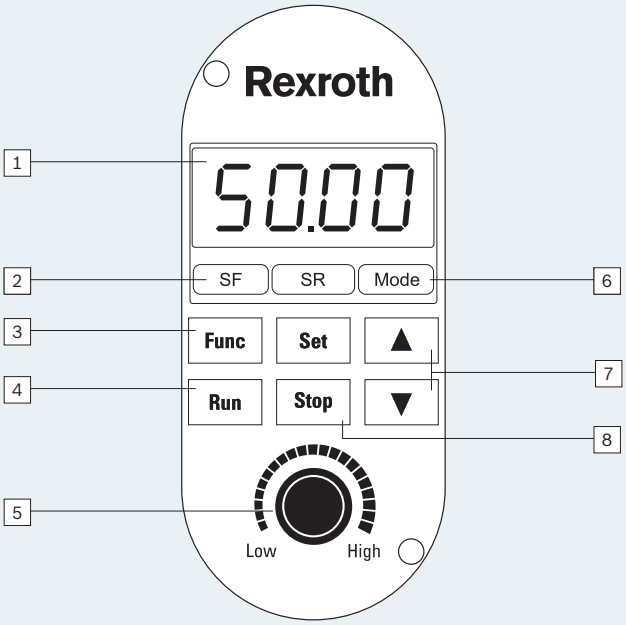


1 | LED display
- ▶ output frequency
- ▶ parameters
- ▶ error codes

2 | Status LED
Status of frequency converter
- ▶ SF: Motor turns forward
- ▶ SR: Motors turns reverse
- ▶ Mode: Parameterization

3 | Function key
- ▶ One menu level up

4 | Run key
- ▶ Start frequency converter

5 | Potentiometer for frequency converters up to 7.5 kW
- ▶ Frequency setting

6 | Status LED, status of frequency converter
- ▶ SF: Motor turns forward
- ▶ SR: Motors turns reverse
- ▶ Mode: Parameterization

7 | Arrow keys
- ▶ select parameters
- ▶ change parameters

8 | Stop key
- ▶ stop frequency converter
- ▶ error reset

# Frequency Converter Fe – Parameterize in five steps

| | Step | Example:<br>Changing the base frequency | Display |
|---|---|---|---|
| 1 | **Move drive to home position** | Switch on frequency converter or stop running drive by pressing the [Stop] key. |  |
| 2 | **Select menu group** | Press [Func] key twice: Menu group selection area opens<br><br>Keys [▲] [▼]: Changes between menu groups (b, E, P, H, d)<br><br>Press [Set] key once: Selects menu group<br>> here, menu group b-00 “Basis function b” |  <br>  |
| 3 | **Select parameter set** | Keys [▲] [▼]: Changes between basis parameters<br>> here, parameter set b-04 “base frequency” |  |
| 4 | **Select and change parameter set** | Press [Set] key once: Selects parameter<br>> shows current parameter value (e.g. 50 Hz) on display<br><br>Keys [▲] [▼]: Sets new parameter value (e.g. 45 Hz)<br><br>Press [Set] key once: Saves new parameter value<br>and goes to next parameter set<br>> here, b-05 “base voltage”<br><br>If additional parameters need to be changed<br>> repeat process from step 3<br><br>If no parameters need to be changed<br>> press [Func] key once and go back to menu group b-00 “Basis function b” |  <br>  <br>  <br>  |
| 5 | **End parameterization and reinstate home position** | Press [Func] key once: reinstates home position of drive |  |

# Frequency Converter Fe – Type code

**FEC G 02.1-7K50-3P400-A-SP-MODB-01V01**

**Application**
**G** = general automation
**P** = pump, fan

**Max. Power**
e.g. **7K50** = 7.5 kW

**Power supply**
3P400 = 3 AC 380 to 480 V

**Degrees of protection**
A = IP20

**Firmware**

**Interface**
MODB = ModBus

**Operating panel**
**SP** = small operating panel with potentiometer (to 7.5 kW)
**BN** = large operating panel without potentiometer (from 11 kW)

Frequency Converter Fe is available in two variants to ensure optimal integration:

**G-type with high overload capacity**
- high torque is required at machine start-up
- less torque is required when rated speed is reached
- e.g. during “cold” starting of plants such as assembly lines or agitators

**P-type with high durability**
- almost no torque is required at machine start-up
- required torque increases the higher the operating speed, however
- e.g. fan and pump applications

**G-type**

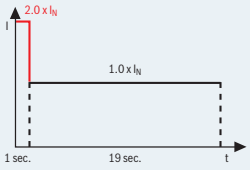


**2 x overload for 1 sec. during 20 sec. cycle time**

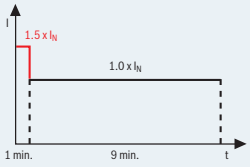


**1.5 x overload for 1 min. during 10 min. cycle time**

**P-type**

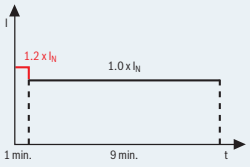


**1.2 x overload for 1 min. during 10 min. cycle time**

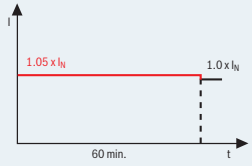


**1.05 x overload for 60 min.**

# Frequency Converter Fe – Functions

| | | |
|---|---|---|
| **Power connections** | | |
| Power supply voltage | | 3 AC 380 to 480 V (-15 %/+10 %) |
| Supply frequency | | 50 to 60 Hz (±5 %) |
| Rated motor output | | 0.75 to 160 kW |
| **Motor connections** | | |
| Rated motor voltage | | 3-phase, 0 V to power supply voltage |
| Output frequency | | 0 to 650 Hz |
| **Functions** | | |
| Control mode | | V/F |
| Overload capacity | G-type | 2 x $I_N$ for 1 sec. |
| | | 1.5 x $I_N$ for 60 sec. |
| | P-type | 1.2 x $I_N$ for 1 min. |
| | | 1.05 x $I_N$ for 60 min. |
| Pulse width modulation (PWM) for converters with | 0.75 to 7.5 kW | 1 to 15 kHz, continuously adjustable in 1 kHz steps |
| | 11 to 45 kW | 1 to 8 kHz, continuously adjustable in 1 kHz steps |
| | 55 to 160 kW | 1 to 6 kHz, continuously adjustable in 1 kHz steps |
| Internal brake chopper | | Standard brake chopper up to 15 kW |
| Modulation type | | Magnetic flux PWM modulation |
| Speed regulation range | | 1:100 |
| Start-up torque | | Maximum start-up torque 150 % at 5 Hz (torque and slip compensation activated) |
| Frequency resolution | Digital | 0.01 Hz |
| | Analog | Maximum frequency x 0.1 % |
| V/F characteristic curve | | Freely definable |
| Ramps | | Linear, S-curve |
| Direct-current brake | Start frequency | 0.00 to 60.00 Hz |
| | Braking time | 0.1 to 10.0 sec. |
| Automatic energy saving function | | Load-dependent adaptation of V/F characteristic curve |
| Automatic voltage regulation (AVR) | | Excessively high supply voltage is automatically reduced to rated motor voltage |
| Automatic PWM frequency adaptation | | Load-dependent adaptation of PWM frequency |
| Integrated controller | | Integrated PLC, operating panel |
| Status messages via multi-function output signal | | In/above/below frequency range, operation, etc. |
| Bus systems | | ModBus |
| | | PROFIBUS (option) |
| **Ambient conditions** | | |
| Ambient temperature | | -10 to +40 °C (output must be reduced from 40 to 50 °C) |
| Max. installation height | | To 1,000 m w/o derating, max. 4,000 m above sea level with reduced output of -20 % |
| Relative humidity | | < 90 % |
| Degrees of protection | | IP20 |

# Frequency Converter Fe – Technical data

| Type | | | FECG02.1- | | | | FECG02.1- or FECP02.1- | | | | | | | | | | | | | | |
|---|---|---|---|---|---|---|---|---|---|---|---|---|---|---|---|---|---|---|---|---|---|
| | | | 0K75-3P400-A-SP-MODB-01V01 | 1K50-3P400-A-SP-MODB-01V01 | 2K20-3P400-A-SP-MODB-01V01 | 4K00-3P400-A-SP-MODB-01V01 | 5K50-3P400-A-SP-MODB-01V01 | 7K50-3P400-A-SP-MODB-01V01 | 11K0-3P400-A-BN-MODB-01V01 | 15K0-3P400-A-BN-MODB-01V01 | 18K5-3P400-A-BN-MODB-01V01 | 22K0-3P400-A-BN-MODB-01V01 | 30K0-3P400-A-BN-MODB-01V01 | 37K0-3P400-A-BN-MODB-01V01 | 45K0-3P400-A-BN-MODB-01V01 | 55K0-3P400-A-BN-MODB-01V01 | 75K0-3P400-A-BN-MODB-01V01 | 90K0-3P400-A-BN-MODB-01V01 | 110K-3P400-A-BN-MODB-01V01 | 132K-3P400-A-BN-MODB-01V01 | 160K-3P400-A-BN-MODB-01V01 |
| **Performance data** | | | | | | | | | | | | | | | | | | | | | |
| Power supply voltage | | V | 3 AC 380 to 480 V (-15 %/+10 %) | | | | | | | | | | | | | | | | | | |
| Supply frequency | | Hz | 50 to 60 (±5 %) | | | | | | | | | | | | | | | | | | |
| Rated motor output | | kW | 0.75 | 1.5 | 2.2 | 4 | 5.5 | 7.5 | 11 | 15 | 18.5 | 22 | 30 | 37 | 45 | 55 | 75 | 90 | 110 | 132 | 160 |
| Continuous rated current | | A | 2.5 | 4 | 6 | 10 | 13 | 17 | 24 | 33 | 39 | 44 | 60 | 75 | 95 | 110 | 152 | 183 | 223 | 265 | 325 |
| Output voltage | | V | 0 to power supply voltage | | | | | | | | | | | | | | | | | | |
| Output frequency | | Hz | 0 to 650 | | | | | | | | | | | | | | | | | | |
| Overload capacity | G-type | | 2 x $I_N$ for 1 sec. or 1.5 x $I_N$ for 1 min. | | | | | | | | | | | | | | | | | | |
| | P-type | | – | | | | 1.2 x $I_N$ for 1 min. or 1.05 x $I_N$ for 60 min. | | | | | | | | | | | | | | |
| **Brake** | | | | | | | | | | | | | | | | | | | | | |
| Brake chopper | | | internal | | | | | | | | external | | | | | | | | | | |
| Braking resistor | | | external | | | | | | | | | | | | | | | | | | |
| **Mechanical data** | | | | | | | | | | | | | | | | | | | | | |
| Size | | | 1 | | | | | | 2 | | 3 | | 4 | | 5 | | 6 | | 7 | | |
| Width | W | mm | 125 | | | | | | 220 | | 275 | | 290 | | 364 | | 455 | | 570 | | |
| | w | mm | 109 | | | | | | 180 | | 200 | | 200 | | 260 | | 375 | | 450 | | |
| Height | H | mm | 220 | | | | | | 392 | | 463 | | 574 | | 602 | | 682 | | 850 | | |
| | h | mm | 204 | | | | | | 372 | | 443 | | 550 | | 576 | | 650 | | 825 | | |
| Depth | D | mm | 176 | | | | | | 218 | | 218 | | 236 | | 260 | | 290 | | 360 | | |
| Mounting hole | G | mm | 6 | | | | | | 9.5 | | 9.5 | | 11 | | 11 | | 12 | | 11 | | |
| Mass | | kg | 3.0 | | 3.2 | | 3.5 | | 10.7 | 10.9 | 16.2 | 16.9 | 21.5 | 22 | 33.2 | 33.8 | 50.9 | 52.5 | 96.5 | 100 | 102 |

# Frequency Converter Fe – Dimensions

**Size 1**

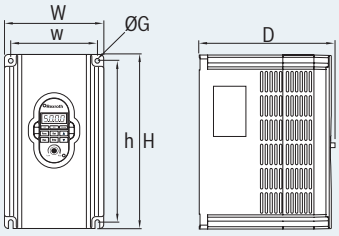


**Size 2, 3, 4**

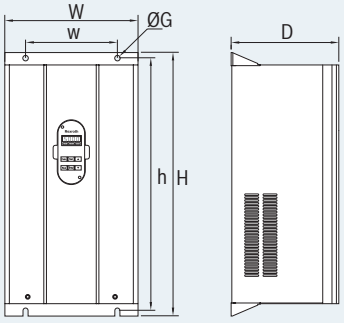


**Size 5, 6**

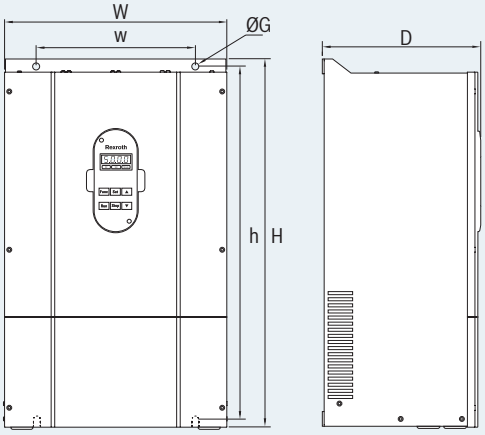


**Size 7**

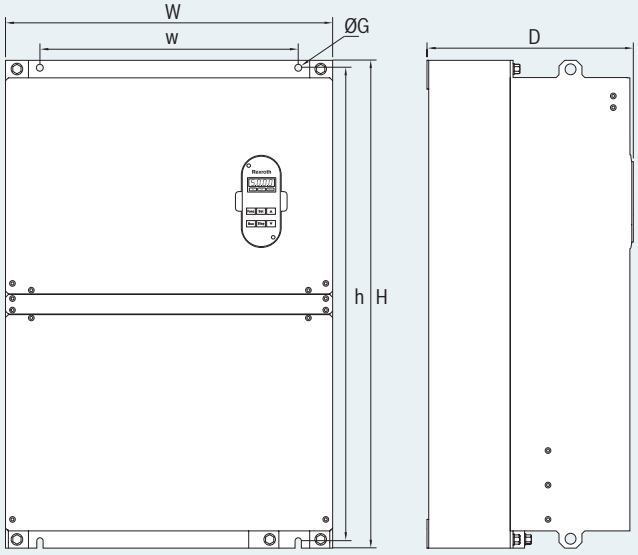

# Frequency Converter Fe – Terminal description

| Category | Terminal strip | Signal function | Signal request |
|---|---|---|---|
| Digital input signals | E-Stop | Stop converter output | Dependent on the position of the NPN/PNP switch |
| | RST | Error reset | |
| | SF | Forward/stop | |
| | SR | Reverse/stop | |
| | X1, X2, X3 | Multi-function inputs | |
| | SC | Shared +24 V/COM connection for digital input signals | |
| Analog input signals | +10 V | Supply voltage for external frequency setpoint value specified | 10 V (max. current 10 mA) |
| | VRC | Analog main frequency reference | Switch 5, position 1-2:<br>• Input voltage range: 0 to 5 V<br>• Input resistance: 50 kΩ<br>• Resolution: 1:2,000 |
| | | | Switch 5, position 2-3:<br>• Input voltage range: 0 to 10 V<br>• Input resistance: 100 kΩ<br>• Resolution: 1:2,000 |
| | +I | | • Input current: 4 to 20 mA<br>• Input resistance: 165 Ω<br>• Resolution: 1:1,000 |
| | FB | Analog feedback signal for CLOSED LOOP control | • Input voltage range: 0 to 5 V<br>• Input resistance: 100 kΩ<br>• Resolution: 1:1,000 |
| | GND | Frame potential (0 V) | – |
| Digital output signals | OUT1/CME | Open collector output 1 | Open collector outputs insulated via opto-electric couplers:<br>• Max. output voltage range: 24 VDC<br>• Max. output current: 50 mA |
| | OUT2/CME | Open collector output 2 | |
| | DO/COM | Digital frequency output | Open collector output insulated via opto-electric coupler:<br>• Max. output voltage range: 24 VDC<br>• Max. output frequency range: 50 kHz |
| | +24 V | Shared +24 V connection for digital output signals | +24 VDC |
| | Ta | Relay changeover contacts | Contact transmitter capacity:<br>• 250 VAC, 3 A<br>• 30 VDC, 3 A |
| | Tc | | |
| | Tb | Shared relay contact | |
| Analog output signals | FM1/GND | Analog multi-function output 1 | Output voltage/current settable via switch 3 for FM1 and via switch 4 for FM2:<br>• Output voltage: 0 or 2 to 10 V<br>• Output current: 0 or 4 to 20 mA |
| | FM2/GND | Analog multi-function output 2 | |
| Encoder signal | PGP/COM | Supply voltage +24 VDC | Max. output current: 100 mA |
| | A+ | Encoder signal A | • Connection voltage: 8 to 24 V<br>• Max. input frequency: 50 kHz |
| | A- | | |
| | B+ | Encoder signal B | |
| | B- | | |
| Communication | 485+ | RS485 interface | – |
| | 485- | | |

# Frequency Converter Fe – Block diagram

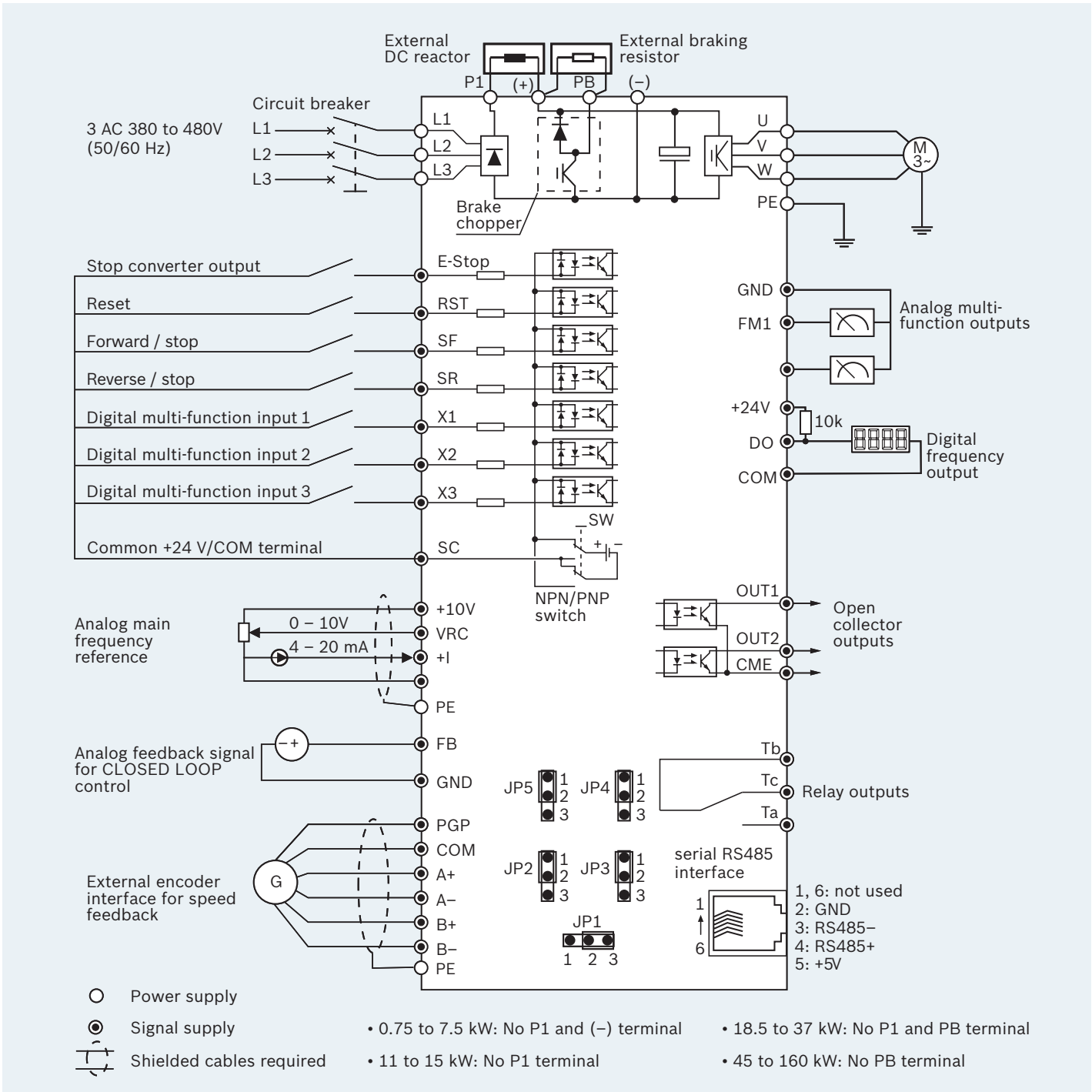

# Frequency Converter Fe – Accessories and cross reference

**Brake chopper**
Brake chopper are available with 30 kW and 45 kW.
Dimensions: Width = 103 mm
Height = 187 mm
Depth = 158 mm
Mass = 2.6 kg

**Main chokes**
Adding a main choke increases DC bus continuous output. Main chokes reduce the harmonics in the line current, while simultaneously preventing circuit feedback. This combination is in compliance with the EMC values for industrial networks as stated in EN 61800-3.

**EMC filters**
EMC filters ensure that the EMC limit values are adhered and suppress leakage current generated by line capacitors.
Together with shielded motor cables, this combination ensures trouble-free operation i.a.w. EN 61800-3 Environment C3.

* Additional product and order information regarding main chokes and EMC filters is available directly from Bosch Rexroth subsidiaries or authorized distributors.

**PROFIBUS adapter**
The PROFIBUS adapter converts the serial RS485 interface of the Frequency Converter Fe to the PROFIBUS standard and enables communication with a higher-level machine control. The adapter is mounted by simply clicking it into a DIN rail.
Dimensions: Width = 25 mm
Height = 82 mm
Depth = 111 mm

**Remote operating panel for control cabinet mounting**
The optional operating panel for control cabinet mounting allows the user to conveniently operate the frequency converter from the outside of the control cabinet.
The connection cable for the operating panel is available in lengths of 1 and 3 meters.
Dimensions: Width = 133 mm
Height = 55 mm
Depth = 18 mm

The adjacent table lists the optimal combination of frequency converter, brake chopper and brake resistor and the number of components required to operate one frequency converter with respect to a given moderating ratio OT.

The three digits of the cell content (x/x/x) indicate a particular moderating ratio:
Digit 1 ~ OT = 10 % Digit 2 ~ OT = 20 % Digit 3 ~ OT = 40 %

The place value (1, 2, 3 or 4) corresponds to the number of components required to operate a frequency converter.

| Frequency converters | FECG02.1- | | | | FECG02.1- or FECP02.1- | | | | | | | | | | | | |
|---|---|---|---|---|---|---|---|---|---|---|---|---|---|---|---|---|---|
| | 0K75 | 1K50 | 2K20 | 4K00 | 5K50 | 7K50 | 11K0 | 15K0 | 18K5 | 22K0 | 30K0 | 37K0 | 45K0 | 55K0 | 75K0 | 90K0 | 110K |
| **Brake choppers** | | | | | | | | | | | | | | | | | |
| FELB02.1N-30K0-NNONE-A-560-NNNN | | | | | | | | | 1/1/- | 1/1/- | 1/-/2 | -/-/- | -/2/- | 2/-/- | -/-/- | -/-/- | -/-/- |
| FELB02.1N-45K0-NNONE-A-560-NNNN | | | | | | | | | -/-/1 | -/-/1 | -/1/- | 1/1/2 | 1/-/2 | -/2/3 | 2/3/4 | 3/3/4 | 3/3/- |
| **Brake resistors** | | | | | | | | | | | | | | | | | |
| FELR01.1N-0080-N750R-D-560-NNNN | 1/-/- | | | | | | | | | | | | | | | | |
| FELR01.1N-0150-N700R-D-560-NNNN | -/1/- | | | | | | | | | | | | | | | | |
| FELR01.1N-0260-N250R-D-560-NNNN | | | 1/-/- | | | | | | | | | | | | | | |
| FELR01.1N-0260-N400R-D-560-NNNN | | 1/-/- | | | | | | | | | | | | | | | |
| FELR01.1N-0390-N150R-D-560-NNNN | | | | 1/-/- | | | | | | | | | | | | | |
| FELR01.1N-0500-N550R-D-560-NNNN | -/-/1 | | | | | | | | | | | | | | | | |
| FELR01.1N-0520-N100R-D-560-NNNN | | | | | 1/-/- | | | | | | | | | | | | |
| FELR01.1N-0520-N230R-D-560-NNNN | | | -/1/- | | | | | | | | | | | | | | |
| FELR01.1N-0520-N350R-D-560-NNNN | | -/1/- | | | | | | | | | | | | | | | |
| FELR01.1N-0780-N075R-D-560-NNNN | | | | | | 1/-/- | | | | | | | | | | | |
| FELR01.1N-0780-N140R-D-560-NNNN | | | | -/1/- | | | | | | | | | | | | | |
| FELR01.1N-0800-N275R-D-560-NNNN | | -/-/1 | | | | | | | | | | | | | | | |
| FELR01.1N-1K04-N050R-D-560-NNNN | | | | | | | 1/-/- | | | | | | | | | | |
| FELR01.1N-1K04-N090R-D-560-NNNN | | | | | -/1/- | | | | | | | | | | | | |
| FELR01.1N-01K2-N180R-D-560-NNNN | | | -/-/1 | | | | | | | | | | | | | | |
| FELR01.1N-01K5-N068R-D-560-NNNN | | | | | | | | -/2/- | | | | | | | | | |
| FELR01.1N-01K5-N150R-D-560-NNNN | | | | | -/-/2 | | | | | | | | | | | | |
| FELR01.1N-1K56-N040R-D-560-NNNN | | | | | | | | 1/-/- | | | | | | | | | |
| FELR01.1N-1K56-N070R-D-560-NNNN | | | | | | -/1/- | | | | | | | | | | | |
| FELR01.1N-02K0-N047R-D-560-NNNN | | | | | | | -/1/- | | | | | | | | | | |
| FELR01.1N-02K0-N110R-D-560-NNNN | | | | -/-/1 | | | | | | | | | | | | | |
| FELR01.1N-04K5-N055R-A-560-NNNN | | | | | | -/-/1 | | | | | | | | | | | |
| FELR01.1N-04K8-N27R2-A-560-NNNN | | | | | | | | | | 1/-/- | | | | | | | |
| FELR01.1N-04K8-N032R-A-560-NNNN | | | | | | | | | 1/-/- | | | | | | | | |
| FELR01.1N-06K0-N020R-A-560-NNNN | | | | | | | | | | | 1/-/- | | | 2/-/- | | 3/-/- | 3/-/- |
| FELR01.1N-06K0-N040R-A-560-NNNN | | | | | | | -/-/1 | | | | | | | | | | |
| FELR01.1N-08K0-N027R-A-560-NNNN | | | | | | | | -/-/1 | | | | | | | | | |
| FELR01.1N-09K6-N13R6-A-560-NNNN | | | | | | | | | | | | | 1/-/- | | 2/-/- | | |
| FELR01.1N-09K6-N016R-A-560-NNNN | | | | | | | | | | | | 1/-/- | | | | | |
| FELR01.1N-10K0-N022R-A-560-NNNN | | | | | | | | | -/-/1 | -/1/- | | -/-/2 | | | -/-/4 | -/-/4 | |
| FELR01.1N-10K0-N024R-A-560-NNNN | | | | | | | | | | | | | -/2/- | | | | |
| FELR01.1N-10K0-N27R2-A-560-NNNN | | | | | | | | | | | -/-/2 | | | | | | |
| FELR01.1N-10K0-N028R-A-560-NNNN | | | | | | | | | -/1/- | | | | | | | | |
| FELR01.1N-10K0-N032R-A-560-NNNN | | | | | | | | | | | | -/2/- | | | | | |
| FELR01.1N-12K5-N017R-A-560-NNNN | | | | | | | | | | | -/1/- | | | | | | |
| FELR01.1N-12K5-N018R-A-560-NNNN | | | | | | | | | | -/-/1 | | | -/-/2 | -/2/- | | | |
| FELR01.1N-12K5-N020R-A-560-NNNN | | | | | | | | | | | | | | | -/3/- | -/3/- | -/3/- |
| FELR01.1N-12K5-N022R-A-560-NNNN | | | | | | | | | | | | | | -/-/3 | | | |

| Brake resistors | On time OT | Permanent braking power | Resistance | Width W | Height H | Depth D | Mass | Design |
|---|---|---|---|---|---|---|---|---|
| | % | kW | Ω | mm | mm | mm | kg | |
| FELR01.1N-0080-N750R-D-560-NNNN | 10 | 0.08 | 750 | 140 | 20 | 40 | 0.20 | Aluminium housing |
| FELR01.1N-0150-N700R-D-560-NNNN | 20 | 0.15 | 700 | 215 | 20 | 40 | 0.32 | |
| FELR01.1N-0260-N250R-D-560-NNNN | 10 | 0.26 | 250 | 215 | 30 | 60 | 0.62 | |
| FELR01.1N-0260-N400R-D-560-NNNN | 10 | 0.26 | 400 | 215 | 30 | 60 | 0.62 | |
| FELR01.1N-0390-N150R-D-560-NNNN | 10 | 0.39 | 150 | 265 | 30 | 60 | 0.80 | |
| FELR01.1N-0500-N550R-D-560-NNNN | 40 | 0.50 | 550 | 335 | 30 | 60 | 1.03 | |
| FELR01.1N-0520-N100R-D-560-NNNN | 10 | 0.52 | 100 | 335 | 30 | 60 | 1.03 | |
| FELR01.1N-0520-N230R-D-560-NNNN | 20 | 0.52 | 230 | 335 | 30 | 60 | 1.03 | |
| FELR01.1N-0520-N350R-D-560-NNNN | 20 | 0.52 | 350 | 335 | 30 | 60 | 1.03 | |
| FELR01.1N-0780-N075R-D-560-NNNN | 10 | 0.78 | 140 | 400 | 59 | 61 | 2.20 | |
| FELR01.1N-0780-N140R-D-560-NNNN | 20 | 0.78 | 150 | 400 | 59 | 61 | 2.20 | |
| FELR01.1N-0800-N275R-D-560-NNNN | 40 | 0.80 | 275 | 400 | 59 | 61 | 2.20 | |
| FELR01.1N-1K04-N050R-D-560-NNNN | 10 | 1.04 | 50 | 400 | 107 | 50 | 3.60 | |
| FELR01.1N-1K04-N090R-D-560-NNNN | 20 | 1.04 | 90 | 400 | 107 | 50 | 3.60 | |
| FELR01.1N-01K2-N180R-D-560-NNNN | 40 | 1.20 | 180 | 450 | 107 | 50 | 4.00 | |
| FELR01.1N-01K5-N068R-D-560-NNNN | 20 | 1.50 | 68 | 485 | 107 | 50 | 4.35 | |
| FELR01.1N-01K5-N150R-D-560-NNNN | 40 | 1.50 | 150 | 485 | 107 | 50 | 4.35 | |
| FELR01.1N-1K56-N040R-D-560-NNNN | 10 | 1.56 | 40 | 485 | 107 | 50 | 4.35 | |
| FELR01.1N-1K56-N070R-D-560-NNNN | 20 | 1.56 | 70 | 485 | 107 | 50 | 4.35 | |
| FELR01.1N-02K0-N047R-D-560-NNNN | 20 | 2.00 | 47 | 550 | 107 | 50 | 4.90 | |
| FELR01.1N-02K0-N110R-D-560-NNNN | 40 | 2.00 | 110 | 550 | 107 | 50 | 4.90 | |
| FELR01.1N-04K5-N055R-A-560-NNNN | 40 | 4.50 | 55 | 340 | 600 | 145 | 12.00 | Resistor box |
| FELR01.1N-04K8-N27R2-A-560-NNNN | 10 | 4.80 | 27.2 | 340 | 600 | 145 | 12.00 | |
| FELR01.1N-04K8-N032R-A-560-NNNN | 10 | 4.80 | 32 | 340 | 600 | 145 | 12.00 | |
| FELR01.1N-06K0-N020R-A-560-NNNN | 10 | 6.00 | 20 | 340 | 600 | 145 | 14.00 | |
| FELR01.1N-06K0-N040R-A-560-NNNN | 40 | 6.00 | 40 | 340 | 600 | 145 | 14.00 | |
| FELR01.1N-08K0-N027R-A-560-NNNN | 40 | 8.00 | 27 | 410 | 685 | 145 | 16.50 | |
| FELR01.1N-09K6-N13R6-A-560-NNNN | 10 | 9.60 | 13.6 | 410 | 685 | 145 | 18.50 | |
| FELR01.1N-09K6-N016R-A-560-NNNN | 10 | 9.60 | 16 | 410 | 685 | 145 | 18.50 | |
| FELR01.1N-10K0-N022R-A-560-NNNN | 20 | 10.00 | 22 | 410 | 685 | 145 | 18.50 | |
| FELR01.1N-10K0-N024R-A-560-NNNN | 20 | 10.00 | 24 | 410 | 685 | 145 | 18.50 | |
| FELR01.1N-10K0-N27R2-A-560-NNNN | 40 | 10.00 | 27.2 | 410 | 685 | 145 | 18.50 | |
| FELR01.1N-10K0-N028R-A-560-NNNN | 20 | 10.00 | 28 | 410 | 685 | 145 | 18.50 | |
| FELR01.1N-10K0-N032R-A-560-NNNN | 20 | 10.00 | 32 | 410 | 685 | 145 | 18.50 | |
| FELR01.1N-12K5-N017R-A-560-NNNN | 20 | 12.50 | 17 | 410 | 685 | 145 | 20.50 | |
| FELR01.1N-12K5-N018R-A-560-NNNN | 20 | 12.50 | 18 | 410 | 685 | 145 | 20.50 | |
| FELR01.1N-12K5-N020R-A-560-NNNN | 20 | 12.50 | 20 | 410 | 685 | 145 | 20.50 | |
| FELR01.1N-12K5-N022R-A-560-NNNN | 40 | 12.50 | 22 | 410 | 685 | 145 | 20.50 | |

Please refer to the selection table at the end of this section for correct assignment to the frequency converters and brake choppers.

**Brake Resistance Caculation**

Brake resistors with different power ratings are available to dissipate braking energy when the frequency converter is in generator mode.

$$\text{On time (OT)} = \frac{\text{Braking time } (t_B)}{\text{Cycle time } (t_C)} \times 100\ \%$$

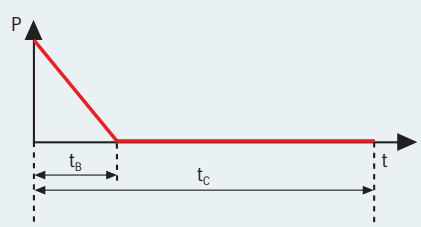

# Our goal:
# To be world market leader in providing benefits to customers

With our broad portfolio of products and services we are geared to responding swiftly and flexibly to all your requirements – from development and production, right through to sales and service. Working in co-operation with you, we will come up with the perfect solution for every application. Our products, combined with our consulting expertise, will give you that decisive competitive edge, while minimizing your technical and financial outlay.

**Rexroth offers everything that you need for drive, control and motion technology:**

- **Electric Drives and Controls**
- **Industrial Hydraulics**
- **Mobile Hydraulics**
- **Linear Technology**
- **Assembly Technology**
- **Pneumatics**


Rexroth is unique. No other brand on the world market can offer its customers all drive and control technologies, both on a specialized and integrated basis. We are considered the worldwide benchmark when it comes to drives, controls and motion. Our technological leadership is continually setting us new challenges, with approximately 35,000 employees in more than 80 countries around the world. This is possible thanks to an infrastructure designed always with partnership and customer proximity in mind.

As a company, Bosch Rexroth can look back on more than 200 years of tradition. As a wholly-owned subsidiary of Robert Bosch GmbH, we are part of a globally-operating technology group. All this is both our drive and our commitment. And it's unique – just like Bosch Rexroth.
The Drive & Control Company.

# Information/Notes

# Information/Notes

Rexroth
Bosch Group

**Bosch Rexroth (Xi'an) Electric Drives and Controls Co., Ltd.**
No.3999 Shang Ji Rd,
Economic and Technological
Development Zone,
710021, Xi'an, Shaanxi
Province. P.R.China
Tel. +86 29 86555-100
Fax +86 29 86555-106
www.boschrexroth.com

71 519 AE/2011-01–A3