YLI ELECTRONIC

European Type Floor Mount Door Holder

Model: YD-609B

Patent :No.201430356142.2

Basic Instruction

Dual Voltage Selectable(12VDC or 24VDC)
Emergency Release Button/Test Button
Floor Mounting Direction
Low Current Consumption
Reliable Fail-Safe Mechanism
Durable and Silence Operation

Specifications

- Dimension: 110Lx80Wx93H(mm)
- Holding Force: 50kg(110Lbs)
- Voltage: 12/24VDC+10%(Adjustment)
- Current Draw: 12V/140mA 24V/70mA
- Optional: The Hand Moves and Closes the Door to Release the Button
- Suitable for: All Kind of the Single & Double Smokeproof Door
- Surface Temp: ≤+20℃
- Operating Temp: -10～+55℃(14-131F)
- Suitable Humidity: 0~90%(Relative humidity)
- Weight: 1.1kg

Dimension

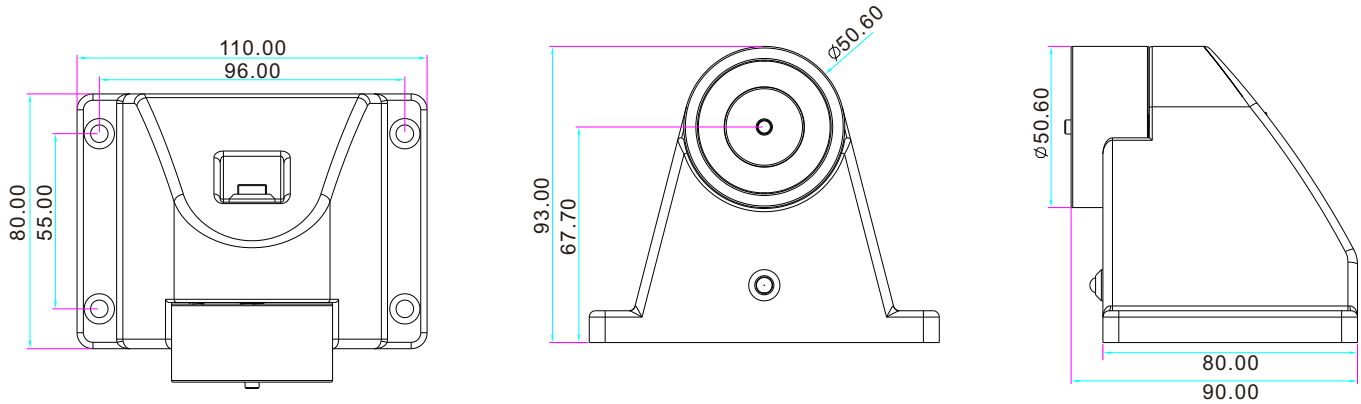

Installation

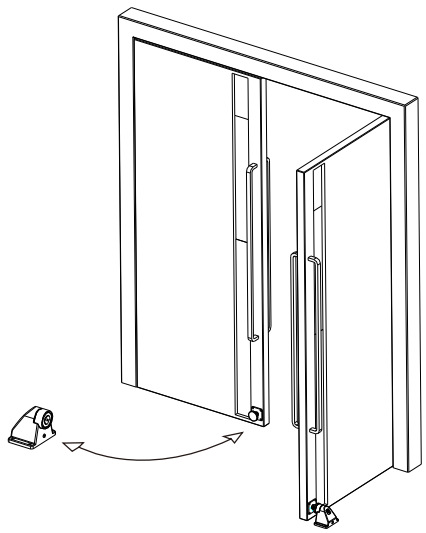

12/24V Adjustable

Remarks:
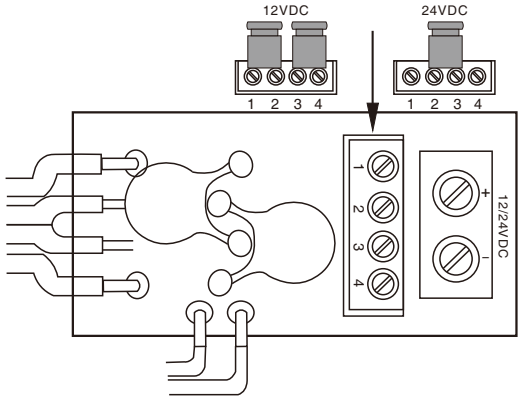
1. The default setting is 24VDC.
2. If user want to connect with 12VDC, operating as below:
(1) Pull those two jumpers out. It is showed 4 pins here.
(2) To set up 12VDC, insert one jumper on the position of 1 and 2, second jumper on the position of 3 and 4.