Z*-P

PRESSURE REDUCING VALVES

SERIES 22

SUBPLATE MOUNTING

Z3-P ISO 5781-06 (CETOP 06)
Z5-P ISO 5781-08 (CETOP 08)

OPERATING PRINCIPLE

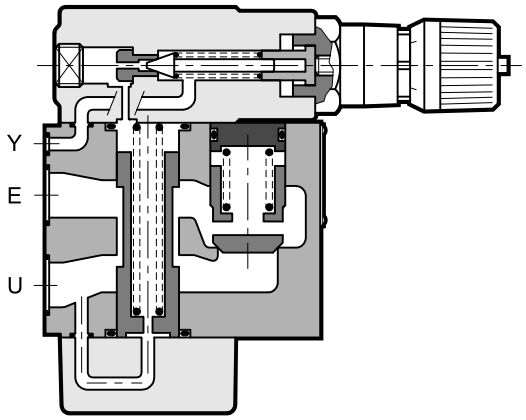

— The Z*-P type valves are used when a branch with a lower pressure than the main one is desired in the hydraulic circuits.

Being normally open, they allow passage of oil up to the point when the outlet pressure is less than that set on the valve; the valve closes and keeps the outlet pressure constant when it reaches the set value. The intake pressure fluctuation, for values greater than the set values, does not affect the reduced outlet pressure, and furthermore the particular design of the valve prevents exceeding the set value even in transients.

The drainage, to be connected directly to the tank, discharges about 0,8 l/min. The valves are available, upon request, with reduced drainage (0,4 l/min).

— Available even with incorporated check valve upon request, with cracking pressure of 0,5 bar.

PERFORMANCES (measured with mineral oil of viscosity 36 cSt at 50°C)

		Z3-P	Z5-P
Maximum operating pressure	bar	250	
Maximum flow rate	l/min	40	110
Drain flow rate: for Z*-P for Z*-P*R	l/min	0,8 0,4	
Ambient temperature range	°C	-20 / +50	
Fluid temperature range	°C	-20 / +80	
Fluid viscosity range	cSt	10 ÷ 400	
Fluid contamination degree	According to ISO 4406:1999 classe 20/18/15		
Recommended viscosity	cSt	25	
Mass	kg	3,9	6,1

HYDRAULIC SYMBOLS

Z*-P

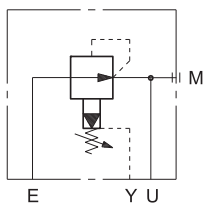

Z*-P/C

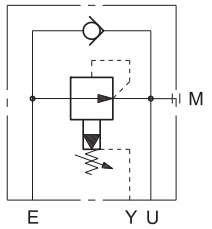

1 - IDENTIFICATION CODE

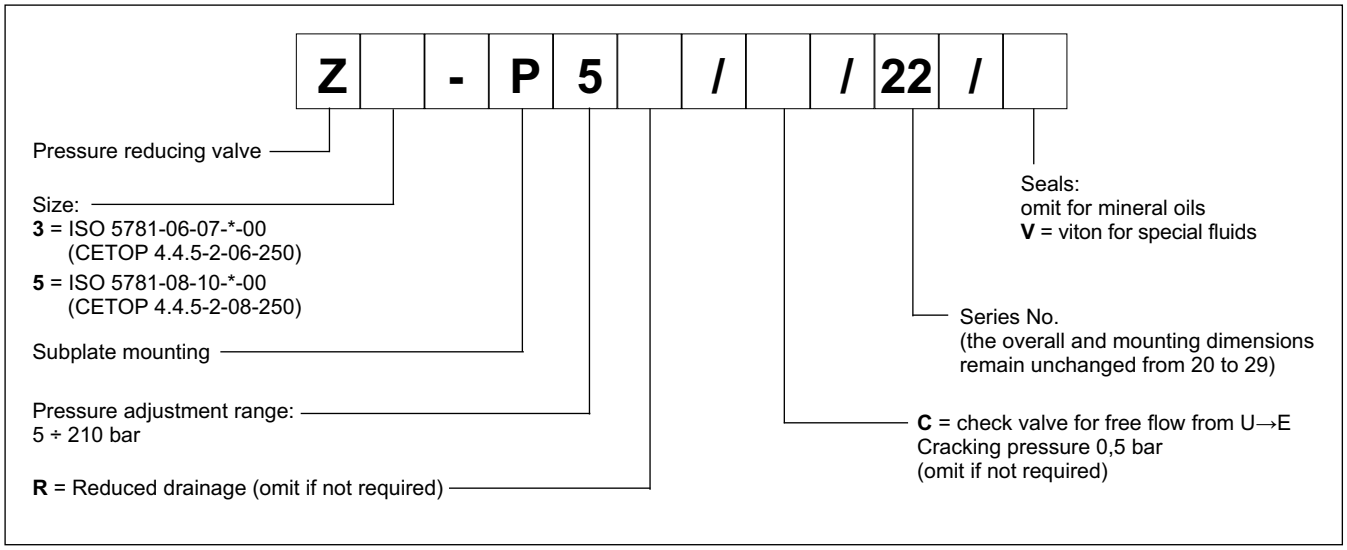

2 - CHARACTERISTIC CURVES (values obtained with viscosity of 36 cSt at 50°C)

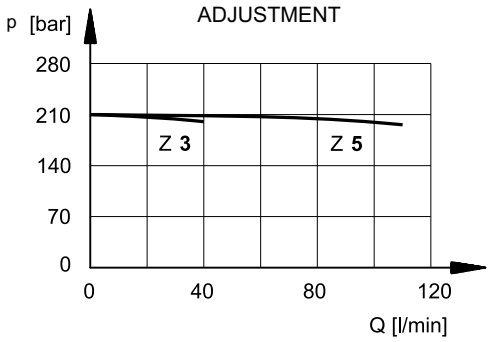

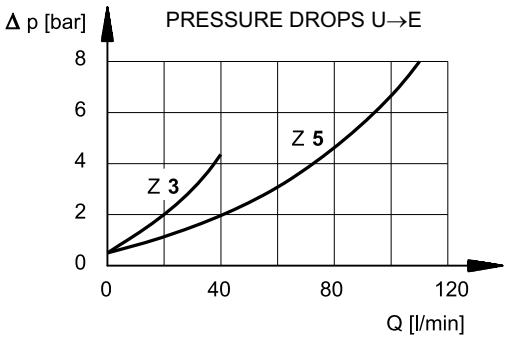

3 - HYDRAULIC FLUIDS

Use mineral oil-based hydraulic fluids HL or HM type, according to ISO 6743-4. For these fluids, use NBR seals. For fluids HFDR type (phosphate esters) use FPM seals (code V).

For the use of other kinds of fluid such as HFA, HFB, HFC, please consult our technical department. Using fluids at temperatures higher than 80 °C causes a faster degradation of the fluid and of the seals characteristics.

The fluid must be preserved in its physical and chemical characteristics.

4 - Z3-P OVERALL AND MOUNTING DIMENSIONS

dimensions in mm

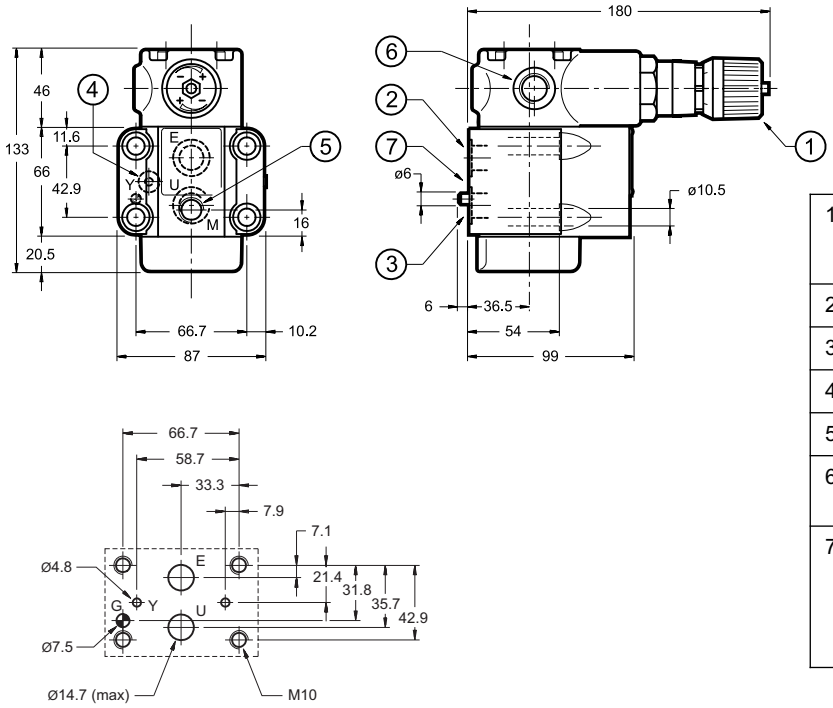

1	SICBLOC adjustment knob. To operate, push and rotate at the same time.
2	Intake
3	Outlet port
4	Drainage port
5	Pressure gauge port 1/4” NPT
6	Supplementary tube port for drainage 1/4” BSP
7	Mounting surface with sealing rings: N. 2 OR type 3068 (17.13x2.62) N. 2 OR type 2021 (5.28x1.78) 90 Shore

FASTENING BOLTS:
4 bolts M10x70
Tightening torque: 40 Nm

MOUNTING SURFACE:ISO 5781-06-07-*-00 (CETOP 4.4.5-2-06-250)

5 - Z5-P OVERALL AND MOUNTING DIMENSIONS

dimensions in mm

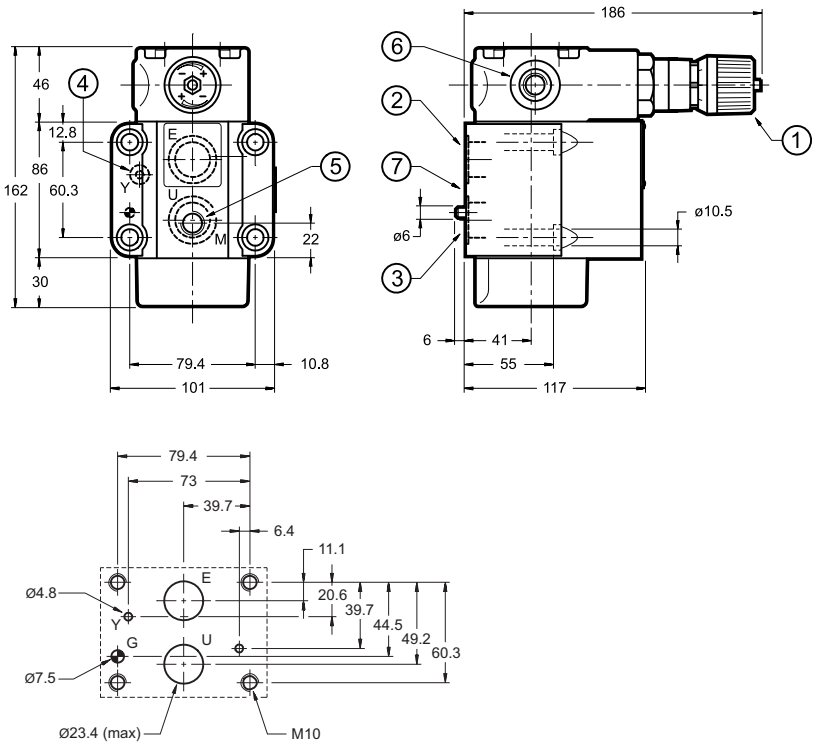

1	SICBLOC adjustment knob. To operate, push and rotate at the same time.
2	Intake
3	Outlet port
4	Drainage port
5	Pressure gauge port 1/4” NPT
6	Supplementary plug for drainage 1/4” BSP
7	Mounting surface with sealing rings: N. 2 OR type 3100 (25.07x2.62) 90 Shore N. 2 OR type 2021 (5.28x1.78) 90 Shore

FASTENING BOLTS:
4 bolts M10x70
Tightening torque: 40 Nm

MOUNTING SURFACE:ISO 5781-08-10-*-00 (CETOP 4.4.5-2-08-250)

6 - SUBPLATES (see catalogue 51 000)

	Z3-P	Z5-P
Type	PMSZ3-AI4G with rear ports	PMSZ5-AI5G with rear ports
Port dimensions: - E, U - X, Y	 1/2” BSP 1/4” BSP	 1” BSP 1/4” BSP

DUPLOMATIC OLEODINAMICA
DUPLOMATIC OLEODINAMICA S.p.A.
20015 PARABIAGO (MI) • Via M. Re Depaolini 24
Tel. +39 0331.895.111
Fax +39 0331.895.339
www.duplomatic.com • e-mail: sales.exp@duplomatic.com

REPRODUCTION IS FORBIDDEN. THE COMPANY RESERVES THE RIGHT TO APPLY ANY MODIFICATIONS.