Alpha series - Front end cylinder with double eye

FSE A129-4-04660-471-K1549	Item no.	70574306
	Tipping weight	29 - 47 ton

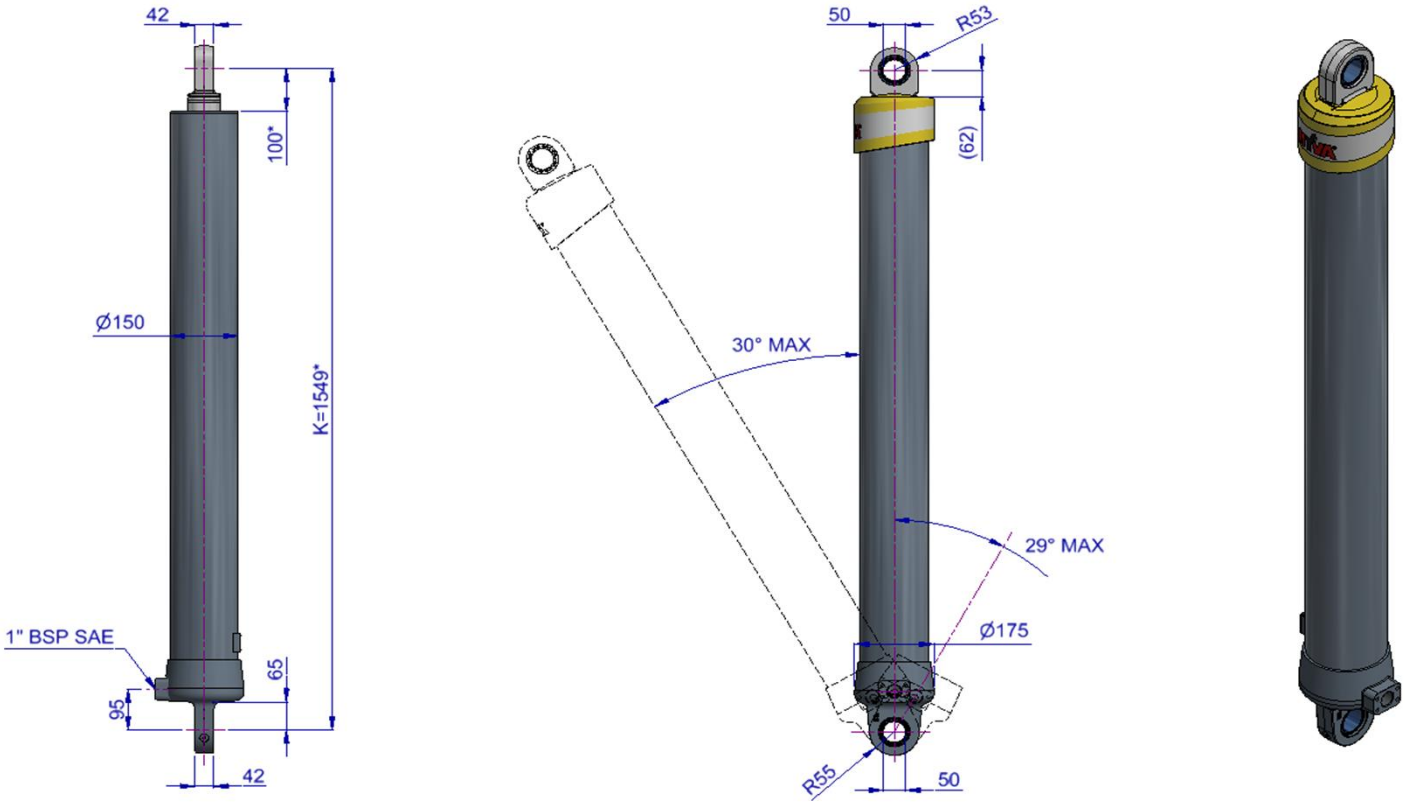

* incl. 20 [-5; +30] mm pull out

3D model is available on request

Specifications

Max. working pressure	250 bar
Weight	138 kg
Working volume	38 L
Total volume	43 L
Max. cyl. load (start tipping)	195 kN

Max. pump flow

With KO[1]	122 L/min
Without KO[1]	86 L/min
With KO[1] below -20°C	85 L/min
Without KO[1] below -20°C	60 L/min

Tipping time

With KO[1]	19 sec
Without KO[1]	27 sec
With KO[1] below -20°C	27 sec
Without KO[1] below -20°C	39 sec
Allowable lowering time	19 sec

Extension	1	2	3	4	5	6	7	Total
Effective diameter [mm]	129	110	91	72				
Stroke* [mm]	1150	1170	1170	1170				4660

Technical notes

● This cylinder is a lifting device only. ● It should not be used as a structural member and should not be subjected to side loads. ● Tipping valve must have a pressure relief at the cylinder port set not higher than max. working pressure. ● Verify max. cyl. load. ● Working temperature range is between -40°C and +80°C. ● Max. duration of extension is 0.5 hours (excluded hard chromed stages). ● Cylinder is painted black (RAL9005) with a min. thickness conforming to the 480 hours neutral salt spray test as per ISO 9227. ● [1] Hyva knock-off.

Related documentation

Bracket options: 015BRA11 & 015BRA13

Mounting instructions: CYL-0033

Oil specifications: OIL-0011

Spec sheet explanation: CYL-0041

Tipping weight

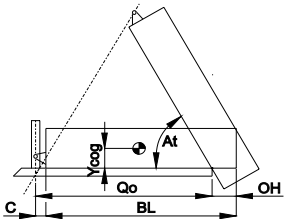

BL	body length
OH	rear overhang
Ycog	vert. pos. centre of gravity
Qo	pivot length
C	bracket length
At	tipping angle
	stroke x 60 / Qo

BL [mm]		6100			5950			5800	
OH [mm]	200	500	800	200	500	800	200	500	800
At [°]	46	49	52	47	50	53	49	52	55
Ycog [mm]									
600	29	32	37	29	33	38	30	34	40
900	31	36	42	32	37	44	33	38	47
1200	34	40		36	42		37	45	

Tipping weight [ton] at maximum pressure of 250 bar for a vertically mounted cylinder and C is 178 mm

For detailed tipping calculations please refer to: https://tipper.hyva.com

Subject to change without notice, no rights reserved

Alpha series - Front end cylinder with double eye

FSE A129-4-04660-471-K1549 Item no. 70574306

Pos.	Part no.	Description	Qty.
C01	71839111	DUST COVER FE 129-4/137-4	1
P01	74401371	PISTON FL2 S 072-1365-HC	1
P02	71853072 K	SLIDER FL 072 (2 X 1/2) A22	2
P04	71822072	BOTTOM PLATE PISTON FL 072	1
P05	01745026 K	CIRCLIP 63 DIN 472 (67.2x2.0)	1
P06	71870210 K	O-RING PISTON BOTTOM 072	1
P07	71847100	PISTON EYE SPH. FL 072 MK2 L=075	1
P08	01226420 K	O-RING 53.57 X 3.53 MM	1
P09	71875450 K	SPHERICAL BEARING D.50.3 MAINT. FREE	1
P10	01770560 K	CIRCLIP 75 DIN 472 (79.5x3.0)	1
P11	71875012	PIN ROUND HEAD GROOVED 8x15 mm	2

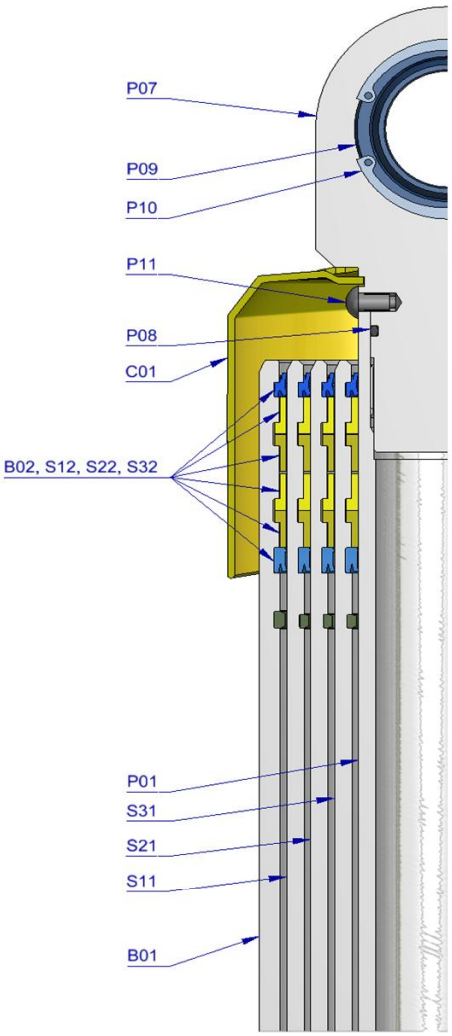

S31	74602370	STAGE FL2 091-1360	1
S32	71802091 K	PACKSET FL 091	1
S33	71853091 K	SLIDER FL 091 (2 X 1/2) A22	1
S34	71851091 K	OUTER STOPRING FL 091 A22	1
S35	71852091 K	LIFTRING FL 091 A22	1
S21	74603370	STAGE FL2 110-1360	1
S22	71802110 K	PACKSET FL 110	1
S23	71853110 K	SLIDER FL 110 (2 X 1/2) A22	1
S24	71851110 K	OUTER STOPRING FL 110 A22	1
S25	71852110 K	LIFTRING FL 110 A22	1
S11	74604370	STAGE FL2 129-1360	1
S12	71802129 K	PACKSET FL 129/HP 129	1
S13	71853129 K	SLIDER FL 129 (2 X 1/2) A22	1
S14	71851129 K	OUTER STOPRING FL 129 A22	1
S15	71852129 K	LIFTRING FL 129 A22	1
B01	74505400	BASE FL2 S 149-1360	1
B02	71802149 K	PACKSET FL 149/HP 150	1
B03	71849020	THREADED BOTTOM FL2 149-4/4SAE-90	1
B04	01226680 K	O-RING 145 X 4 NBR 70 SHORE A	1
B05	71849220 K	BACK-UP RING PTFE STMS 150.1 X 143.5 X 2	1
B06	01225558 K	O-RING 143 X 3 NBR 70 SHORE A	1
B07	71875450 K	SPHERICAL BEARING D.50.3 MAINT. FREE	1
B08	01770560 K	CIRCLIP 75 DIN 472 (79.5x3.0)	1
B09	01792569 K	LOCKING SCREW M6X8 INT. HEX. DIN 916	1
B10	15013720 K	BOLT HSHC M8X16X1 Q8.8 DIN 916 ZP	2

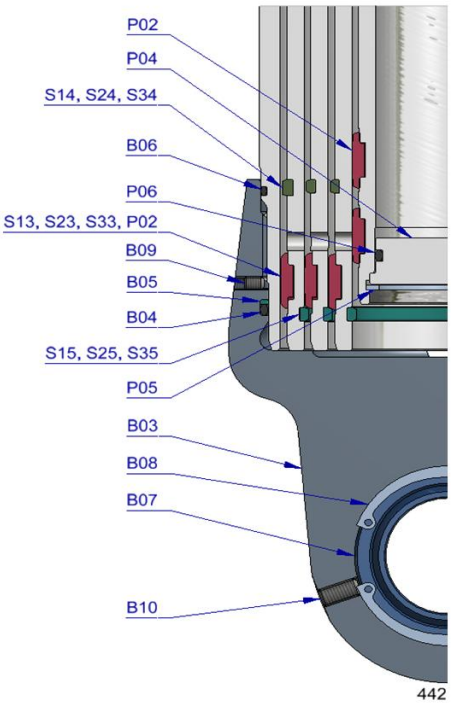

Seal kit complete

	71908445 K	Consists of all packsets with packset grease and O-rings	

Notes

The inner stopring is pre-mounted in the grooves on spare bases and stages. Therefore, when ordering new tubes, it is not required to order inner stoprings separately.

For repair instructions see: CYL-0040. Serial no. is located on type plate and near type plate support.

Subject to change without notice, no rights reserved