Alpha series - Front end cylinder with double eye

FSE A118-3-03880-471-K1699	Item no.	70174230
	Tipping weight	33 - 57 ton

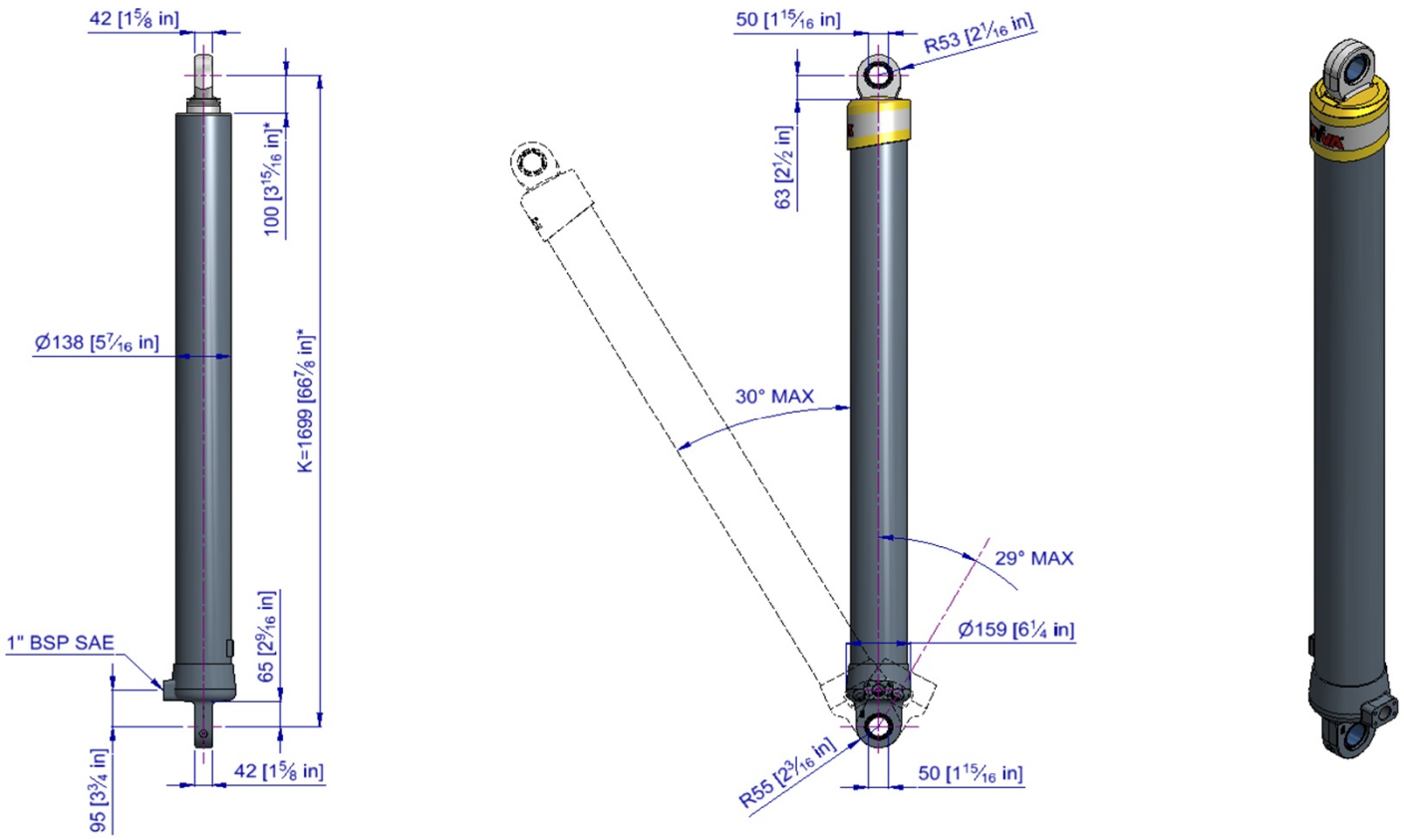

* incl. 20 [-5; +30] mm pull out

3D model is available on request

Specifications

Max. working pressure	250 bar	Max. pump flow (with KO¹)	151 L/min	Resulting tipping time (with KO¹)	12 sec
Weight	119 kg	Max. pump flow (without KO¹)	106 L/min	Resulting tipping time (without KO¹)	17 sec
Working volume	30 L			Allowable lowering time	12 sec
Total volume	34 L				
Max. cyl. load (start tipping)	245 kN				

KO¹: Hyva pneumatic knock off

Extension	1	2	3	4	5	6	7	Total
Effective diameter [mm]	118	99	80					
Stroke* [mm]	1280	1300	1300					3880

Technical notes

● This cylinder is a lifting device only. ● It should not be used as a structural member and should not be subjected to side loads. ● When the cylinder is mounted at an angle, the maximum tipping weight could be reduced. ● Maximum backwards angle of rotation during operation is 29 deg. ● Working pressure depends on the application, but must never exceed the maximum working pressure stated. ● Working temperature range is between -40°C and +80°C. ● Max. duration of extension is 0.5 hours (excluded hard chromed stages). ● Cylinder is painted black (RAL9005) with a thickness conforming to the 480 hours neutral salt spray test as per ISO 9227 (ISO10289, rating 9).

Related documentation

Bracket options: 015BRA11 & 015BRA13 | Mounting instructions: CYL-0033 | Oil specifications: OIL-0011

Tipping weight

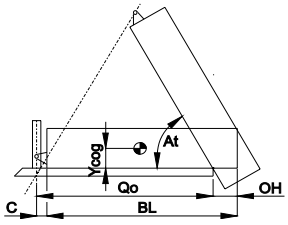

BL	body length
OH	rear overhang
Ycog	vert. pos. centre of gravity
Qo	pivot length
C	bracket length
At	tipping angle
	stroke x 60 / Qo

BL [mm]		5100			4950			4800	
OH [mm]	200	400	600	200	400	600	200	400	600
At [°]	46	48	51	48	50	52	49	52	55
Ycog [mm]									
400	33	36	39	34	36	40	34	37	41
700	36	39	44	37	41	45	38	42	48
1000	40	44	50	41	46	53	42	48	57

Tipping weight [ton] at maximum pressure of 250 bar for a vertically mounted cylinder and C is 178 mm

For detailed tipping calculations please refer to: https://tipper.hyva.com

Subject to change without notice, no rights reserved

Alpha series - Front end cylinder with double eye

FSE A118-3-03880-471-K1699 Item no. 70174230

Pos.	Part no.	Description	Qty.
C01	71839100	DUST COVER FE 110-3/118-3	1
P01	70462511	PISTON MN2 S 080-1515-HC	1
P02	70209300 K	SLIDER MN 080 (2 x 1/2) A22	1
P03	70216080 K	OUTER STOPRING MN 080 A22	1
P04	70224080	BOTTOM PLATE PISTON MN 080	1
P05	01745035 K	CIRCLIP 70 DIN 472 (74.5x2.5)	1
P06	70260210 K	O-RING PISTON BOTTOM 080	1
P07	70235300	PISTON EYE SPH. MN 080 MK2 L=075	1
P08	70260110 K	O-RING 63.09 X 3.53 MM	1
P09	71875450 K	SPHERICAL BEARING D.50 MAINT. FREE	1
P10	01770560 K	CIRCLIP 75 DIN 472 (79.5x3.0)	1
P11	71875012	PIN ROUND HEAD GROOVED 8x15 mm	2

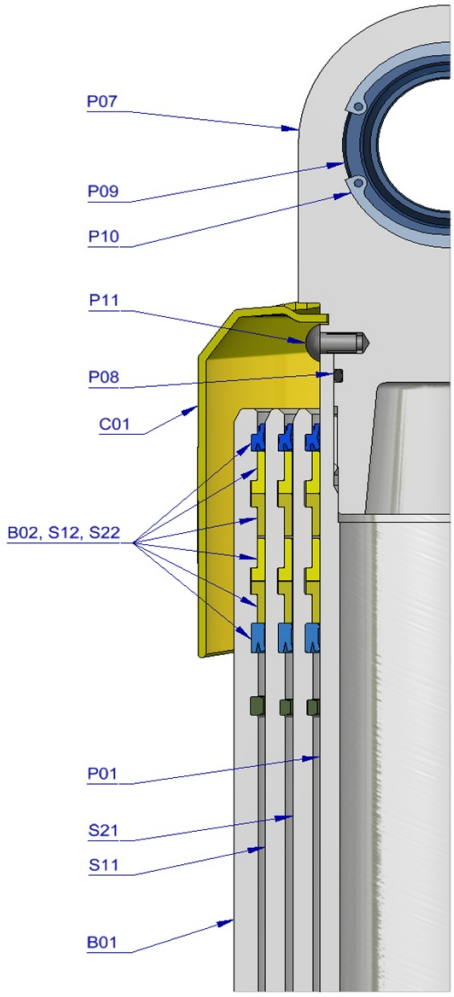

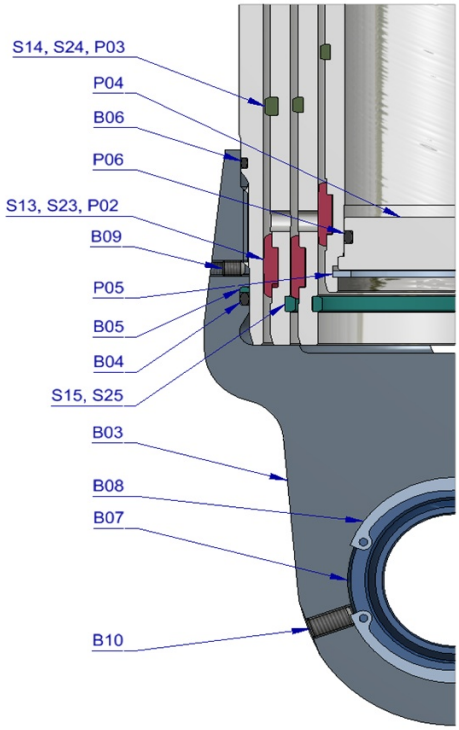

S21	70663510	STAGE MN2 099-1510	1
S22	70203099 K	PACKSET MN 099	1
S23	70209310 K	SLIDER MN 099 (2 x 1/2) A22	1
S24	70216099 K	OUTER STOPRING MN 099 A22	1
S25	70217099 K	LIFTRING MN 099 A22	1
S11	70664510	STAGE MN2 118-1510	1
S12	70203118 K	PACKSET MN 118	1
S13	70209320 K	SLIDER MN 118 (2 x 1/2) A22	1
S14	70216118 K	OUTER STOPRING MN 118 A22	1
S15	70217118 K	LIFTRING MN 118 A22	1
B01	70365540	BASE MN2 S 137-1510	1
B02	70203137 K	PACKSET MN 137	1
B03	70249010	THREADED BOTTOM MN2 137-4/4SAE-90	1
B04	01226678 K	O-RING 132 X 4 NBR 70 SHORE A	1
B05	70250137 K	BACK-UP RING PTFE STMS 138.1 X 131.5 X 2	1
B06	01225556 K	O-RING 131 X 3 NBR 70 SHORE A	1
B07	71875450 K	SPHERICAL BEARING D.50 MAINT. FREE	1
B08	01770560 K	CIRCLIP 75 DIN 472 (79.5x3.0)	1
B09	01792569 K	LOCKING SCREW M6X8 INT. HEX. DIN 916	1
B10	15013720 K	BOLT HSHC M8X16X1 Q8.8 DIN 916 ZP	2

Seal kit complete

	71907435 K	Consists of all packsets with packset grease and O-rings	

Notes

The inner, outer stoprings and liftrings are pre-mounted in the grooves on spare stages and pistons. Therefore, when ordering new tubes, it is not required to order stoprings separately.

For repair instructions see: CYL-0040. Serial no. is located on type plate and below type plate support.

Subject to change without notice, no rights reserved