Alpha series - Front end cylinder with double eye

FEE A169-4-04165-243-K1454-HD	Item no.	70566266
	Tipping weight	68 - 79 ton

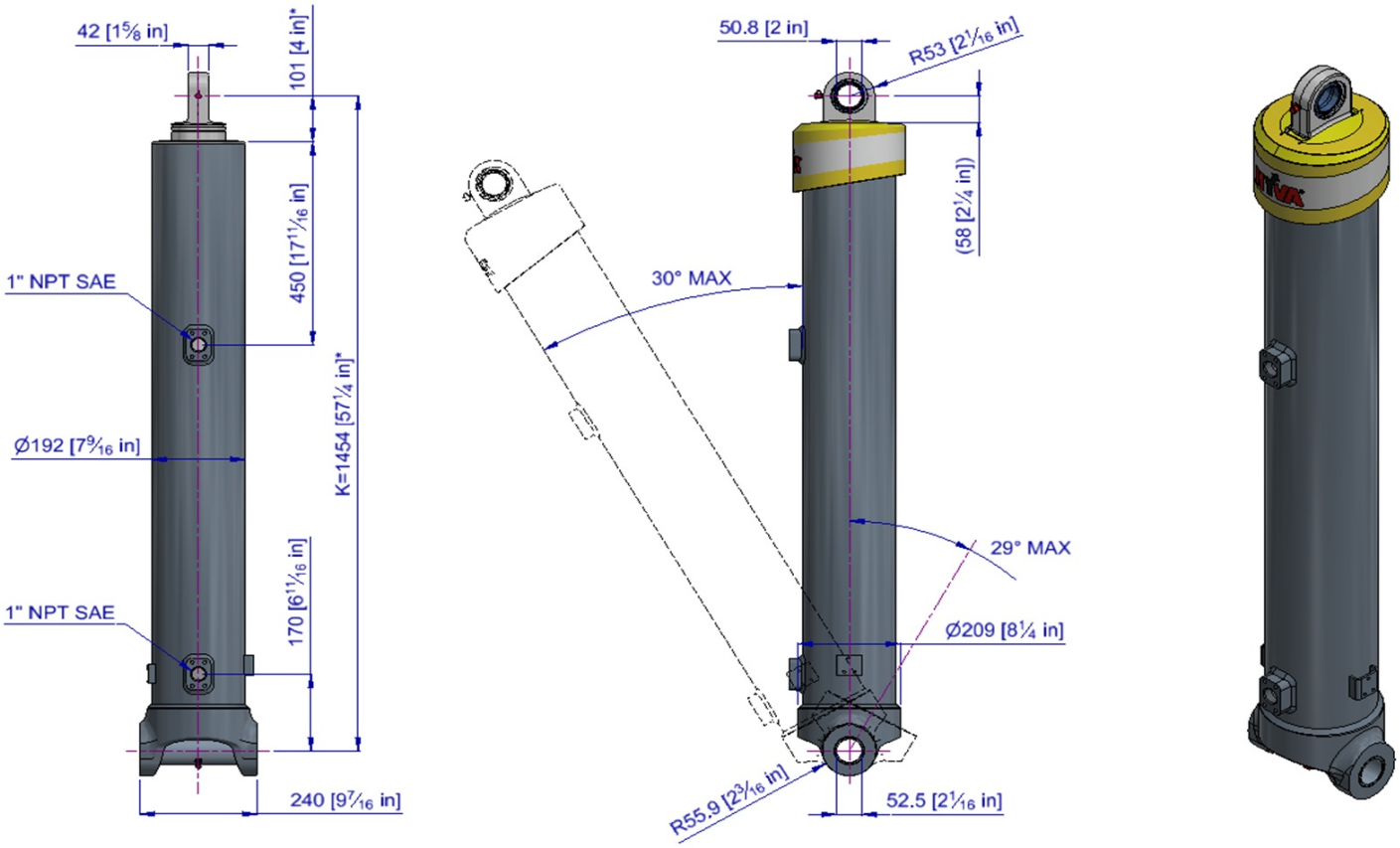

* incl. 20 [-5; +30] mm pull out

3D model is available on request

Specifications

Max. working pressure	250 bar
Weight	192 kg
Working volume	65 L
Total volume	70 L
Max. cyl. load (start tipping)	345 kN

Max. pump flow

With KO[1]	220 L/min
Without KO[1]	190 L/min
With KO[1] below -20°C	154 L/min
Without KO[1] below -20°C	133 L/min

Tipping time

With KO[1]	18 sec
Without KO[1]	21 sec
With KO[1] below -20°C	26 sec
Without KO[1] below -20°C	30 sec
Allowable lowering time	14 sec

Extension	1	2	3	4	5	6	7	Total
Effective diameter [mm]	169	149	129	110				
Stroke* [mm]	1020	1045	1050	1050				4165

Technical notes

● This cylinder is a lifting device only. ● It should not be used as a structural member and should not be subjected to side loads. ● Tipping valve must have a pressure relief at the cylinder port set not higher than max. working pressure. ● Verify max. cyl. load. ● Working temperature range is between -40°C and +80°C. ● Max. duration of extension is 0.5 hours (excluded hard chromed stages). ● Cylinder is painted black (RAL9005) with a min. thickness conforming to the 480 hours neutral salt spray test as per ISO 9227. ● [1] Hyva knock-off.

Related documentation

Bracket options: 015BRA13 & 015BRA17

Mounting instructions: CYL-0032

Oil specifications: OIL-0011

Spec sheet explanation: CYL-0041

Tipping weight

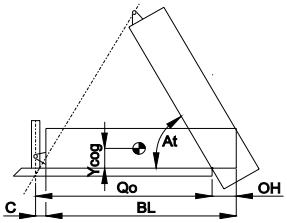

BL	body length
OH	rear overhang
Ycog	vert. pos. centre of gravity
Qo	pivot length
C	bracket length
At	tipping angle
	stroke x 60 / Qo

BL [mm]		5500			5400			5300	
OH [mm]	200	500	800	200	500	800	200	500	800
At [°]	46	49	52	47	50	53	48	51	55
Ycog [mm]									
600	68	78		69	79		71		
900									
1200									

Tipping weight [ton] at maximum pressure of 250 bar for a vertically mounted cylinder and C is 158 mm

For detailed tipping calculations please refer to: https://tipper.hyva.com

Subject to change without notice, no rights reserved

Alpha series - Front end cylinder with double eye

FEE A169-4-04165-243-K1454-HD Item no. 70566266

Pos.	Part no.	Description	Qty.
C01	71839130	DUST COVER FE 169-4/191-5	1
P01	74413301	PISTON FL2 S 110-1280-HD-HC	1
P02	71807112 K	SLIDER FL 110 (2 X 1/2) A35	1
P03	71851110 K	OUTER STOPRING FL 110 A22	2
P04	71822710	BOTTOM PLATE PISTON FL 110 MK2 HD	1
P05	01745021 K	CIRCLIP 97 DIN 472 (102.5x3.0)	1
P06	71870220 K	O-RING PISTON BOTTOM 110	1
P07	71847301	PISTON EYE SPH. FL 110 MK2 L=075 GR	1
P08	01226538 K	O-RING 91.67 X 3.53 MM NBR	1
P09	01770020 K	SPHERICAL BEARING D.50.8 DO OD75 GR.	1
P10	01770560 K	CIRCLIP 75 DIN 472 (79.5x3.0)	1
P11	71875012	PIN ROUND HEAD GROOVED 8x15 mm	2
P12	56288044 K	GREASE NIPPLE M8x1 DIN 71412	1
P13	01317670 K	GREASER PROTECTION CAP	1
S31	74614300	STAGE FL2 129-1275-HD	1
S32	71808129 K	PACKSET FL 129/HP 129 TANDEM SEAL	1
S33	71807131 K	SLIDER FL 129 (2 X 1/2) A35	1
S34	71851129 K	OUTER STOPRING FL 129 A22	2
S35	71852129 K	LIFTRING FL 129 A22	1
S21	74615300	STAGE FL2 149-1275-HD	1
S22	71808149 K	PACKSET FL 149/HP 150 TANDEM SEAL	1
S23	71807151 K	SLIDER FL 149 A35	1
S24	71851149 K	OUTER STOPRING FL 149 A22	2
S25	71852149 K	LIFTRING FL 149 A22	1
S11	74616300	STAGE FL2 169-1275-HD	1
S12	71808169 K	PACKSET FL 169 TANDEM SEAL	1
S13	71807171 K	SLIDER FL 169 A35	1
S14	71851169 K	OUTER STOPRING FL 169 A22	1
S15	71852169 K	LIFTRING FL 169 A22	1
B01	74517312	BASE E 191-1318-4/4NSAE-170/450-O240-HD	1
B02	71802191 K	PACKSET FL 191	1
B03	71825430	BOTTOM PLATE FL2 191	1
B04	71870040 K	SEAL BOTTOM PLATE FL 191	1
B05	71820195	LOCKING PLATE FL2 191	3
B06	01732055 K	BOLT HEX M8X20X1.25 SET 6 PCS	1
B07	01732559 K	WASHER SPRING M8 SET 6 PCS	1
B08	01793071	EYE TRUNNION TUBE (63-52.5) L=240	1
B09	01746121 K	BOLT LOCKING M8x25 DIN 7991	1
B10	56288044 K	GREASE NIPPLE M8x1 DIN 71412	2
B11	01317670 K	GREASER PROTECTION CAP	2

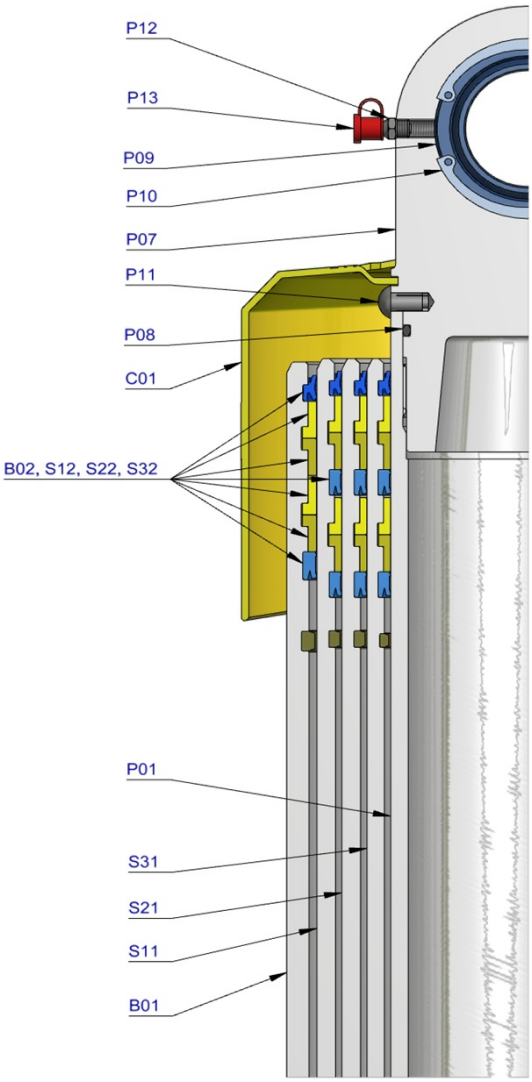

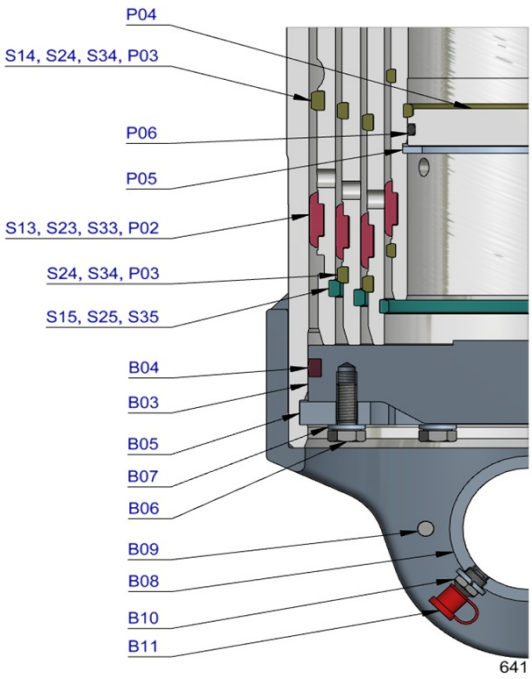

Seal kit complete

	71908641 K	Consists of all packsets with packset grease and O-rings	

Notes

The inner stopring is pre-mounted in the grooves on spare bases and stages. Therefore, when ordering new tubes, it is not required to order inner stoprings separately.

For repair instructions see: CYL-0040. Serial no. is located on type plate and near type plate support.

Subject to change without notice, no rights reserved