Alpha series - Front end cylinder with double eye

FEE A118-3-03140-223-K1450-HD		Item no.	70164170
Equivalent to FEE A5-3-124-K57-HD		Tipping weight	77 - 122 x 1000 lbs

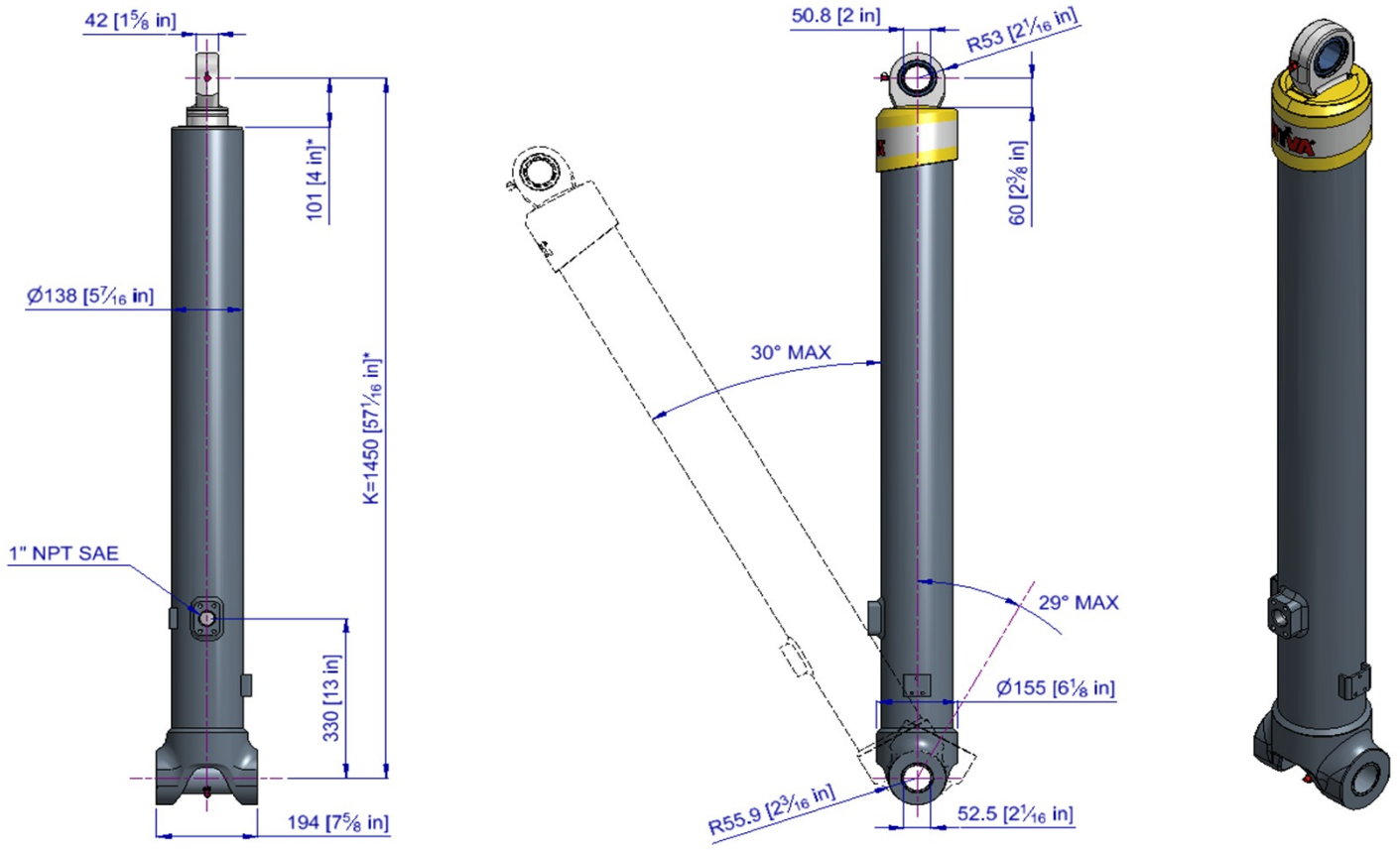

* incl. 0.79 [-0.20; +1.18] inch pull out

3D model is available on request

Specifications

Max. working pressure	3626 psi	Max. pump flow (with KO)	39.9 gallon/min	Resulting tipping time (with KO)	10 sec
Weight	236 lbs	Max. pump flow (without KO)	28 gallon/min	Resulting tipping time (without KO)	14 sec
Working volume	6.6 gallon			Allowable lowering time	8 sec
Total volume	7.1 gallon				
Max. cyl. load (start tipping)	55 klbf				

KO: Hyva pneumatic knock off

Extension	1	2	3	4	5	6	7	Total
Effective diameter [inch]	4.65	3.90	3.15					
Stroke* [inch]	40.6	41.5	41.5					123.6

Technical notes

● This cylinder is a lifting device only. ● It should not be used as a structural member and should not be subjected to side loads. ● When the cylinder is mounted at an angle, the maximum tipping weight could be reduced. ● Maximum backwards angle of rotation during operation is 29 deg. ● Working pressure depends on the application, but must never exceed the maximum working pressure stated. ● Working temperature range is between -40°F and +176°F. ● Max. duration of extension is 0.5 hours (excluded hard chromed stages). ● Cylinder is painted black (RAL9005) with a thickness conforming to the 480 hours neutral salt spray test as per ISO 9227 (ISO10289, rating 9).

Related documentation

Bracket options: 015BRA13 | Mounting instructions: CYL-0032 | Oil specifications: OIL-0011

Tipping weight

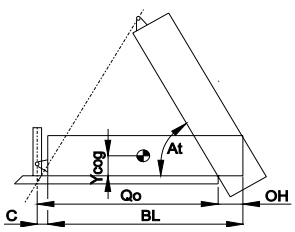

BL	body length
OH	rear overhang
Ycog	vert. pos. centre of gravity
Qo	pivot length
C	bracket length
At	tipping angle
	stroke x 60 / Qo

BL [inch]		161			159			157	
OH [inch]	8	16	24	8	16	24	8	16	24
At [°]	47	50	53	47	50	54	48	51	54
Ycog [inch]									
16	77	85	96	77	86	98	78	87	99
28	86	98	116	87	100	119	88	101	122
39	98	116		100	119		101	122	

Tipping weight [x 1000 lbs] at maximum pressure of 3626 psi for a vertically mounted cylinder and C is 6.22 inch

For detailed tipping calculations please refer to: https://tipper.hyva.com

Subject to change without notice, no rights reserved

Alpha series - Front end cylinder with double eye

FEE A118-3-03140-223-K1450-HD — Item no. 70164170

Equivalent to FEE A5-3-124-K57-HD

Pos.	Part no.	Description	Qty.
C01	71839100	DUST COVER FE 110-3/118-3	1
P01	70472301	PISTON MN2 S 080-1280-HD-HC	1
P02	70207080 K	SLIDER MN 080 (2 x 1/2) A35	1
P03	70216080 K	OUTER STOPRING MN 080 A22	2
P04	70230080	BOTTOM PLATE PISTON MN 080 MK2 HD	1
P05	01745030 K	CIRCLIP 67 DIN 472 (71.5x2.5)	1
P06	70260210 K	O-RING PISTON BOTTOM 080	1
P07	70235301	PISTON EYE SPH. MN 080 MK2 L=075 GR	1
P08	70260110 K	O-RING 63.09 X 3.53 MM	1
P09	01770020 K	SPHERICAL BEARING D.50.8 DO GREASED OD	1
P10	01770560 K	CIRCLIP 75 GE 50 DO DIN 472	1
P11	71875012	PIN ROUND HEAD GROOVED 8x15 mm	2
P12	56288044 K	GREASE NIPPLE M8x1 DIN 71412	1
P13	01317670 K	GREASER PROTECTION CAP	1

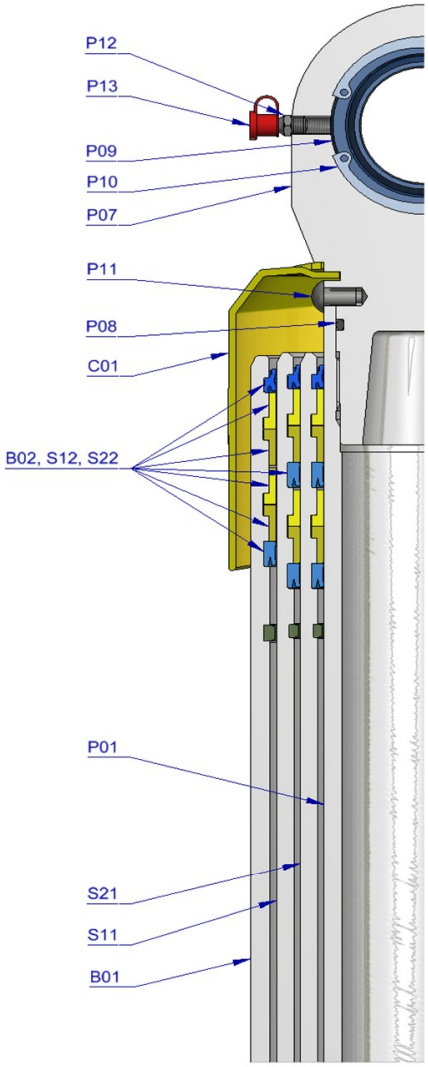

S21	70673300	STAGE MN2 099-1275-HD	1
S22	70202099 K	PACKSET MN 099 TANDEM SEAL	1
S23	70207099 K	SLIDER MN 099 (2 x 1/2) A35	1
S24	70216099 K	OUTER STOPRING MN 099 A22	2
S25	70217099 K	LIFTRING MN 099 A22	1
S11	70674300	STAGE MN2 118-1275-HD	1
S12	70202118 K	PACKSET MN 118 TANDEM SEAL	1
S13	70207118 K	SLIDER MN 118 (2 x 1/2) A35	1
S14	70216118 K	OUTER STOPRING MN 118 A22	1
S15	70217118 K	LIFTRING MN 118 A22	1
B01	70375310	BASE MN2 E 137-1314-4/4NSAE-330-O194-HD	1
B02	70203137 K	PACKSET MN 137	1
B03	70225350	BOTTOM PLATE MN2 137	1
B04	70270137 K	SEAL BOTTOM PLATE MN 137	1
B05	70220137	LOCKING PLATE MN 137	3
B06	01732055 K	BOLT HEX M8X20X1.25 SET 6 PCS	1
B07	01732559 K	WASHER SPRING M8 SET 6 PCS	1
B08	01793041	EYE TRUNNION TUBE (63-52.5) L=194	1
B09	01746121 K	BOLT LOCKING M8x25 DIN 7991	1
B10	56288044 K	GREASE NIPPLE M8x1 DIN 71412	2
B11	01317670 K	GREASER PROTECTION CAP	2

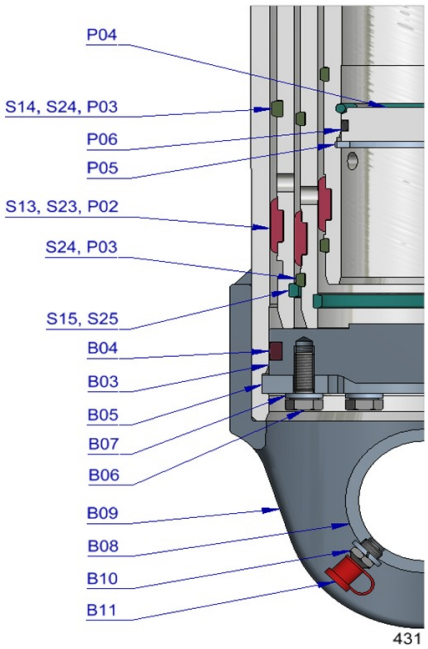

Seal kit complete

	71907431 K	Consists of all packsets with packset grease and O-rings	

Notes

The inner, outer stoprings and liftrings are pre-mounted in the grooves on spare stages and pistons. Therefore, when ordering new tubes, it is not required to order stoprings separately.

For repair instructions see: CYL-0042. Serial no. is located on type plate and below type plate support.

Subject to change without notice, no rights reserved