Alpha series - Front end cylinder with double eye

FEE A129-3-03490-942-K1540	Item no.	70574196
	Tipping weight	44 - 61 ton

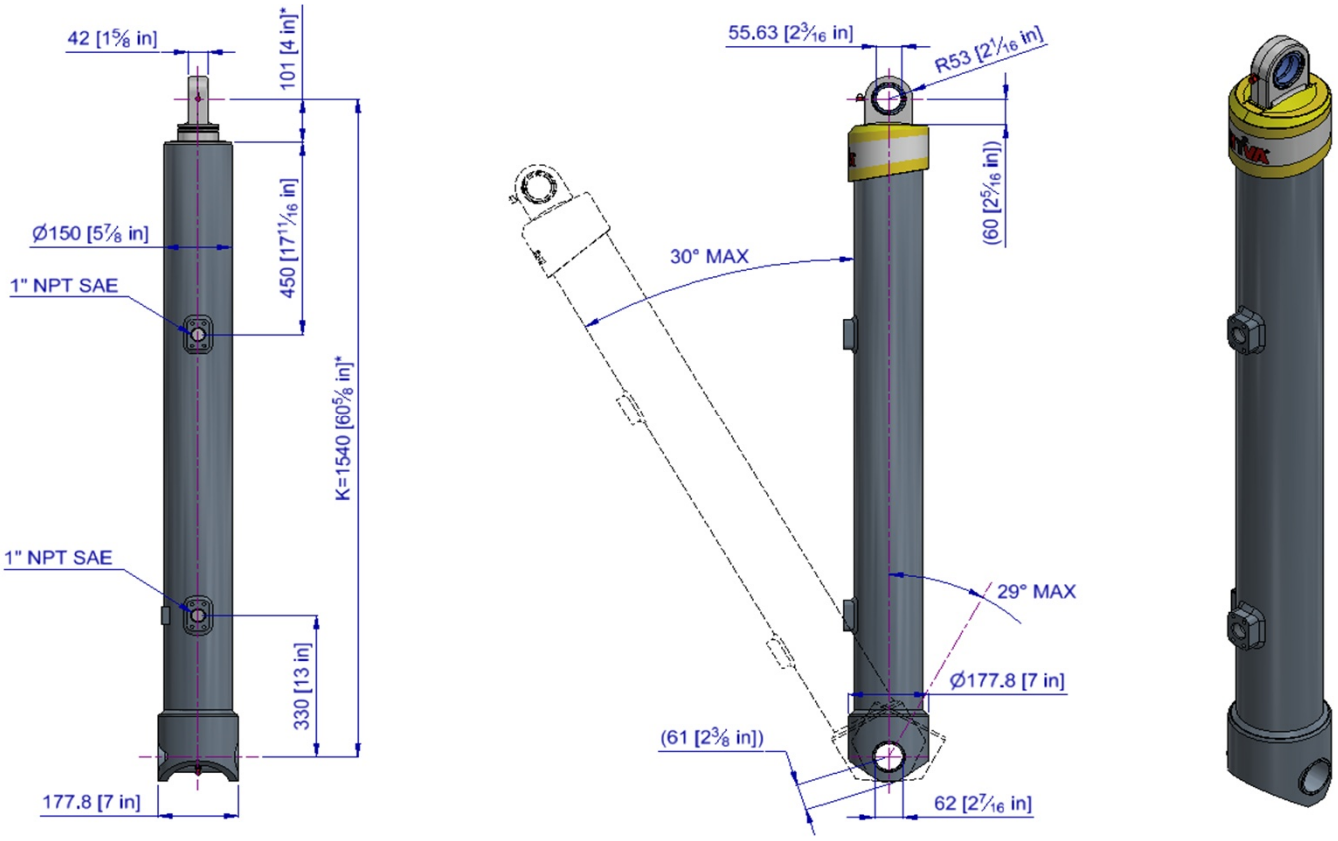

* incl. 20 [-5; +30] mm pull out

3D model is available on request

Specifications

Max. working pressure	250 bar
Weight	128 kg
Working volume	34 L
Total volume	37 L
Max. cyl. load (start tipping)	245 kN

Max. pump flow

With KO[1]	190 L/min
Without KO[1]	137 L/min
With KO[1] below -20°C	133 L/min
Without KO[1] below -20°C	96 L/min

Tipping time

With KO[1]	11 sec
Without KO[1]	15 sec
With KO[1] below -20°C	16 sec
Without KO[1] below -20°C	21 sec
Allowable lowering time	11 sec

Extension	1	2	3	4	5	6	7	Total
Effective diameter [mm]	129	110	91					
Stroke* [mm]	1150	1170	1170					3490

Technical notes

● This cylinder is a lifting device only. ● It should not be used as a structural member and should not be subjected to side loads. ● Tipping valve must have a pressure relief at the cylinder port set not higher than max. working pressure. ● Verify max. cyl. load. ● Working temperature range is between -40°C and +80°C. ● Max. duration of extension is 0.5 hours (excluded hard chromed stages). ● Cylinder is painted black (RAL9005) with a min. thickness conforming to the 480 hours neutral salt spray test as per ISO 9227. ● [1] Hyva knock-off.

Related documentation

Bracket options: -

Mounting instructions: CYL-0032

Oil specifications: OIL-0011

Spec sheet explanation: CYL-0041

Tipping weight

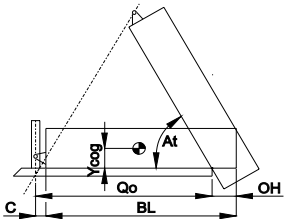

BL	body length
OH	rear overhang
Ycog	vert. pos. centre of gravity
Qo	pivot length
C	bracket length
At	tipping angle
	stroke x 60 / Qo

BL [mm]		4600			4500			4400	
OH [mm]	200	400	600	200	400	600	200	400	600
At [°]	46	49	51	47	50	53	49	51	54
Ycog [mm]									
400	44	47	53	44	48	54	45	49	55
700	48	53	61	49	55		50	56	
1000	54								

Tipping weight [ton] at maximum pressure of 250 bar for a vertically mounted cylinder and C is 158 mm

For detailed tipping calculations please refer to: https://tipper.hyva.com

Subject to change without notice, no rights reserved

Alpha series - Front end cylinder with double eye

FEE A129-3-03490-942-K1540 Item no. 70574196

Pos.	Part no.	Description	Qty.
C01	71839110	DUST COVER FE 129-3/137-3	1
P01	74402371	PISTON FL2 S 091-1365-HC	1
P02	71853091 K	SLIDER FL 091 (2 X 1/2) A22	1
P03	71851091 K	OUTER STOPRING FL 091 A22	1
P04	71822091	BOTTOM PLATE PISTON FL 091	1
P05	01745012 K	CIRCLIP 82 DIN 472 (87.5x2.5)	1
P06	71870215 K	O-RING PISTON BOTTOM 091	1
P07	71847201	PISTON EYE SPH. FL 091 MK2 L=075 GR	1
P08	01226430 K	O-RING 72.62 X 3.53 MM	1
P09	01770213 K	RIGID BUSH EYE 75X55.63 (2.19")	1
P10	01770560 K	CIRCLIP 75 DIN 472 (79.5x3.0)	1
P11	71875012	PIN ROUND HEAD GROOVED 8x15 mm	2
P12	56288044 K	GREASE NIPPLE M8x1 DIN 71412	1
P13	01317670 K	GREASER PROTECTION CAP	1

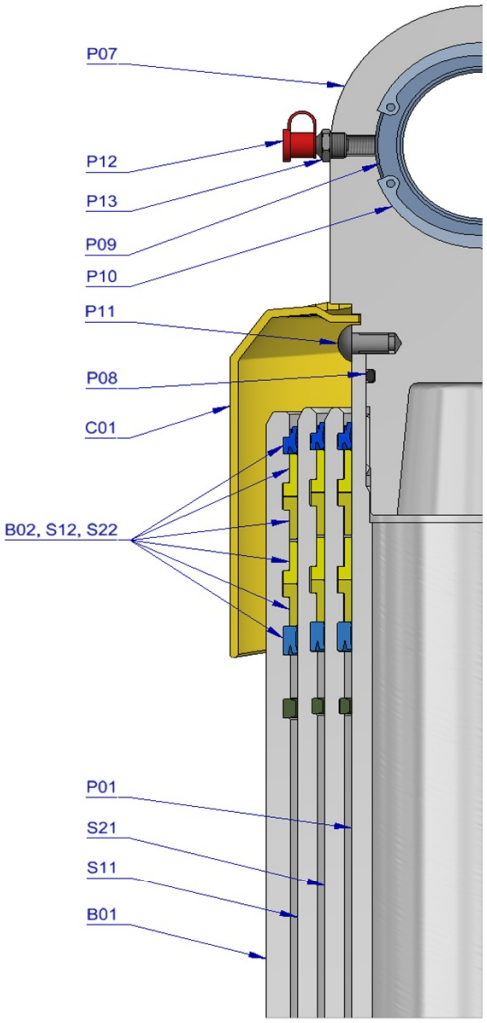

S21	74603370	STAGE FL2 110-1360	1
S22	71802110 K	PACKSET FL 110	1
S23	71853110 K	SLIDER FL 110 (2 X 1/2) A22	1
S24	71851110 K	OUTER STOPRING FL 110 A22	1
S25	71852110 K	LIFTRING FL 110 A22	1
S11	74604370	STAGE FL2 129-1360	1
S12	71802129 K	PACKSET FL 129/HP 129	1
S13	71853129 K	SLIDER FL 129 (2 X 1/2) A22	1
S14	71851129 K	OUTER STOPRING FL 129 A22	1
S15	71852129 K	LIFTRING FL 129 A22	1
B01	74505384L	BASE FL2 E 149-1399-4/4NSAE-330/450-O177	1
B02	71802149 K	PACKSET FL 149/HP 150	1
B03	71825420	BOTTOM PLATE FL2 149	1
B04	71870030 K	SEAL BOTTOM PLATE FL 149	1
B05	71820149	LOCKING PLATE FL 149	3
B06	01732055 K	BOLT HEX M8X20X1.25 SET 6 PCS	1
B07	01732559 K	WASHER SPRING M8 SET 6 PCS	1
B08	01793220	EYE TRUNNION TUBE (73-62) L=177.5	1
B09	01746121 K	BOLT LOCKING M8x25 DIN 7991	1
B10	56288044 K	GREASE NIPPLE M8x1 DIN 71412	2
B11	01317670 K	GREASER PROTECTION CAP	2

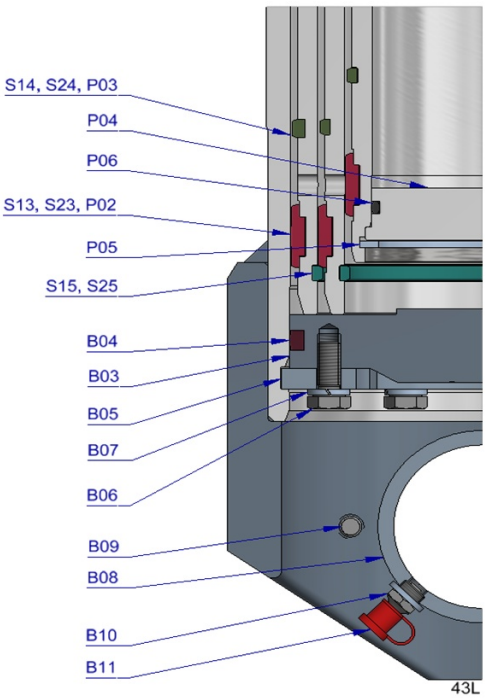

Seal kit complete

	71908430 K	Consists of all packsets with packset grease and O-rings	

Notes

The inner stopring is pre-mounted in the grooves on spare bases and stages. Therefore, when ordering new tubes, it is not required to order inner stoprings separately.

For repair instructions see: CYL-0040. Serial no. is located on type plate and near type plate support.

Subject to change without notice, no rights reserved