EN

FAYMONVILLE
TRAILERS TO THE MAX

MULTIMAX-PLUS

The allrounder for the transport of access equipment

Version 04.2016

www.faymonville.com

FAYMONVILLE
TRAILERS TO THE MAX

BÜLLINGEN (BE) - since 1988
30.000 m²

With an ***experience of over 50 years***, *Faymonville* is one of the biggest manufacturers of semi-trailers for special and heavy haulage.

Faymonville provides their customers with optimal solutions and systems for any transport need outside the usual norms.

Quality, flexibility, productivity, creativity and ***service*** are the company's keywords. The range of products and services is constantly enlarged in tight collaboration with our customers.

GOLENIOW (PL) - since 2006
21.000 m²

The ***high level of innovation*** and the excellent manufacturing quality of the products are secured by optimized production processes and own modern production plants in Büllingen (Belgium), Lentzweiler (Luxembourg) and Goleniow (Poland). A service station has been opened in Noginsk (near Moscow, Russia) and Poland (next to the factory in Goleniow).

NOGINSK (RU) - since 2014
3.120 m²

LENTZWEILER I (LU) - since 2003
20.250 m²

LENTZWEILER II (LU) - since 2015
16.000 m²

*Our successful Multi**MAX** Plus low loaders for the **transport of access equipment** have been improved once again in cooperation with leading users from this sector. Today, they set unequalled standards in terms of **safety**, **ease of operation** and **durability**.*

Many important details have been revised and adapted to the specific requirements. The modular design of the overall concept enables numerous diverse variations.

You can therefore choose between friction-steered axles and hydraulic knuckle-steering axles, between telescoping and fixed loading platforms as well as the most various basic lengths for adherence to the statutory overall combination length depending on your tractor unit.

Main characteristics

- *Adaptable and versatile due to a high level of applied know-how*
- *Optimal dead weight/payload ratio*
- *Extensive selection of accessories*
- *Numerous lashing points for ideal load securing*

Dimensions of the Multi**MAX** Plus

Multi**MAX** Plus-N-3L-UB

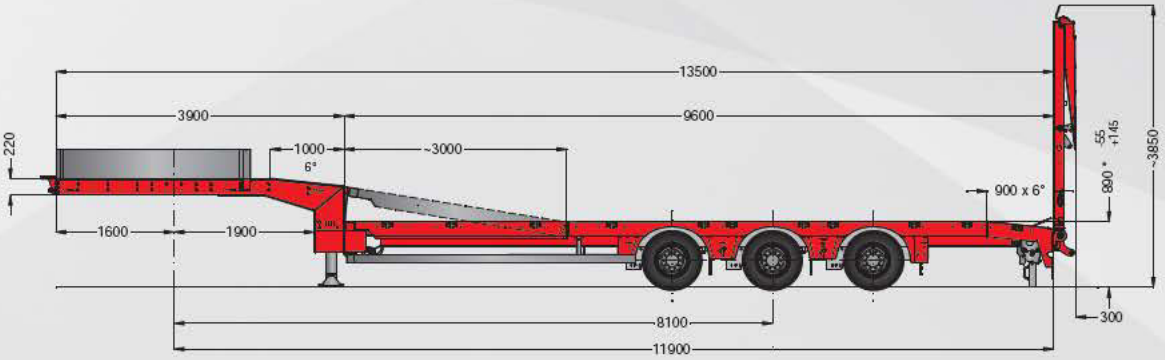

Multi**MAX** Plus-N-3L-AUB

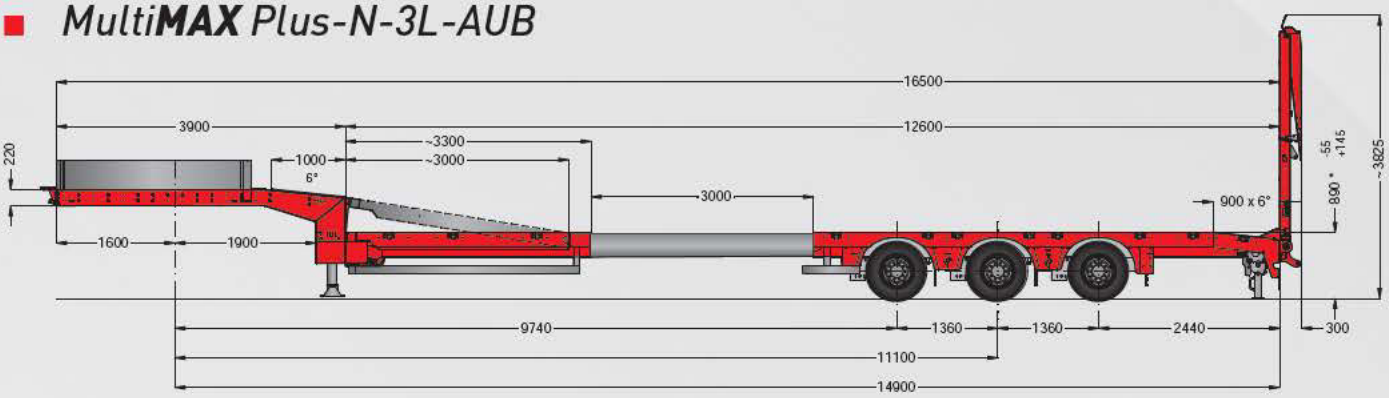

Multi**MAX** Plus-Z-3L-UB

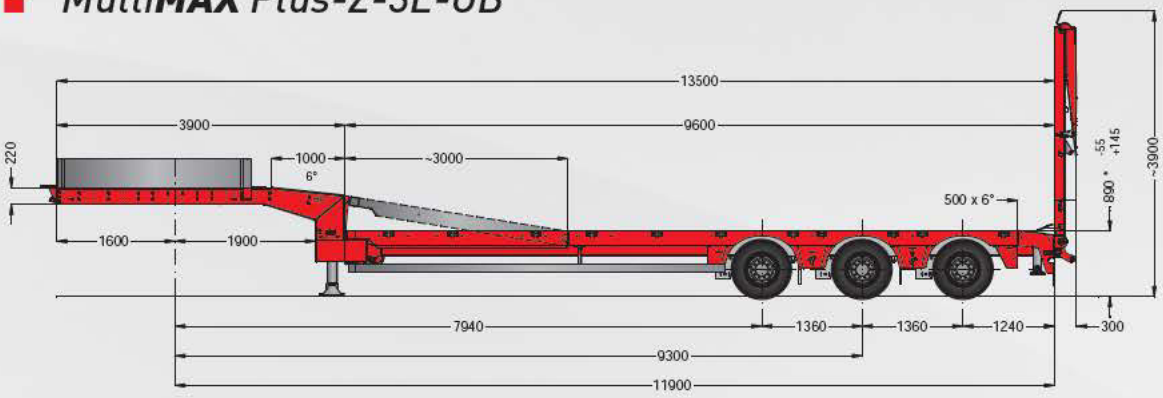

Multi**MAX** Plus-Z-3L-AUB

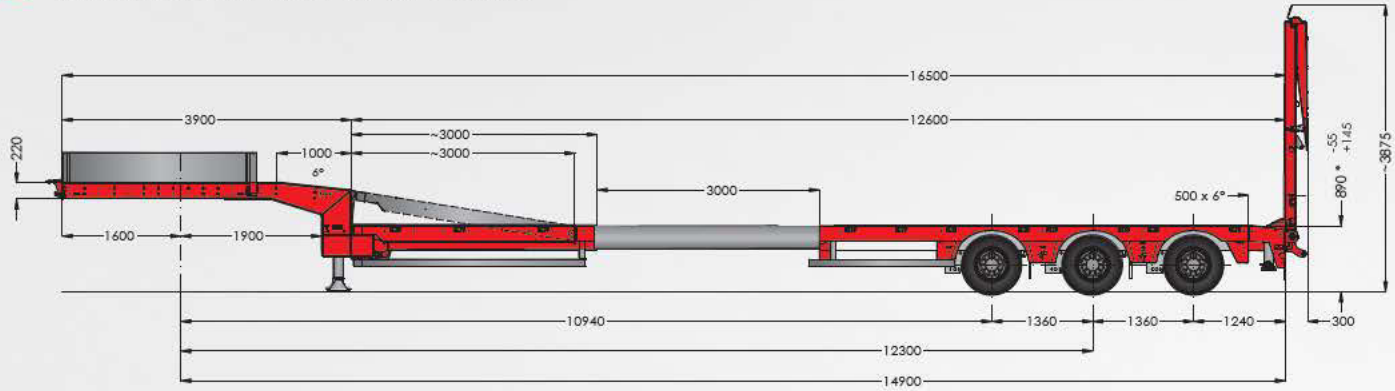

*Equipment of the MULTI**MAX** PLUS*

1. Ramps with integrated loading dock support
2. Support legs for loading dock applications
3. Loading platform with gratings and lashing points
4. Outer frame with lashing points
5. Lifting platform
6. Storage compartment underneath the loading platform (tool box and can holder)
7. Front wall with chain depository
8. Cable winch
9. Connection bar tractor unit positioned higher
10. Working headlight
11. Flashing lights for increased safety

11
1
2
3
4
www.FAYMONVILLE.com

*Novelties of the MULTI**MAX** PLUS*

- *Optimised drive-over plate for a smooth loading process*

- *User-friendly ramp securing*

- *Slidable ramps for flexible drive-on options*

Wireless remote control for the various hydraulic functions

- Operating of the hydraulic lifting platform
- Operation of the hydraulic lifting unit of the ramps
- Operation of the hydraulic shifting capability of the ramps
- Operation of the rear hydraulic landing gears

Foldable landing gears ("One-touch-System")

Hydraulic ramps

Multi**MAX** Plus in Action

Application areas of the Multi**MAX** Plus

*Its modular ultra-lightweight construction turns the Faymonville **MultiMAX** Plus into a particularly adaptable and versatile semi low loader.*

The variant with lifting platform and grating floor is a specially designed vehicle for the transport of lifting platforms, work platforms or fork-lift trucks.

Thanks to its numerous user-oriented options, this semi-trailer makes everyday work noticeably easier.

*With the **MultiMAX** Plus, lifting vehicle rental companies have a vehicle that is optimised in terms of flexibility and economic efficiency.*

MAXPROTECT+

Weather conditions and environmental influences as well as corrosion and stone chips are the biggest enemies of a steel structure. For the long-term surface protection of semi-trailers, FAYMONVILLE relies on ***MAXPROTECT+***, a fully co-ordinated and meticulously optimised surface treatment system.

MAXPROTECT+ is by far the best concept currently available in the industry. That is why it sets the benchmark in the field of surface protection. Our ***MAXPROTECT+*** treatment offers a long-life surface protection.

All stages and processes included in ***MAXPROTECT+*** – from the painting to the metallisation, including shot- and sandblasting – are carried out, developed and tested 'in-house'.

This optimum surface treatment additionally increases the quality and longevity of our products.

Composition of the surface refinement

1. ***Machine blasting***
   Airless blast cleaning with metallic shot.
2. ***Manual blasting***
   Manual cleaning and refinement of the material surface with mineral blasting agents.
3. ***Spray galvanising***
   Application of a zinc/aluminium layer for corrosion and adhesion protection. Partial metallisation especially for strongly stressed surfaces.
4. ***Joint sealing***
   Prevents the spread of rust in the gap and underneath the paintwork.
5. ***Priming***
   2-component zinc epoxy with 81% zinc content and additional active corrosion protection.
6. ***Top coat***
   Final coating with 2-component DTM.
7. ***Sealing***
   Prevents corrosion in corners and hollow spaces.
8. ***Optional: Seawater-resistant complete preservation***

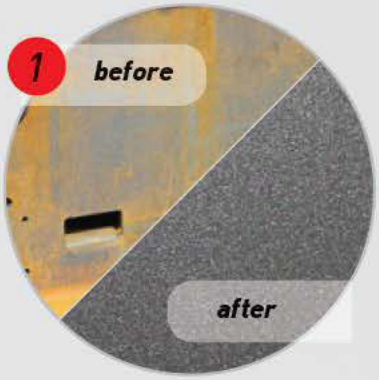

FAYMONVILLE DISTRIBUTION AG
8, Duarrefstrooss | L-9990 WEISWAMPACH
T: +352 / 26 90 04 155 | F: +352 / 26 90 04 425
sales@faymonville.com

www.faymonville.com