Alpha series - Front end cylinder with single eye

FE A149-4-05405-001-K1670-HD	Item no.	70535420
	Tipping weight	39 - 58 ton

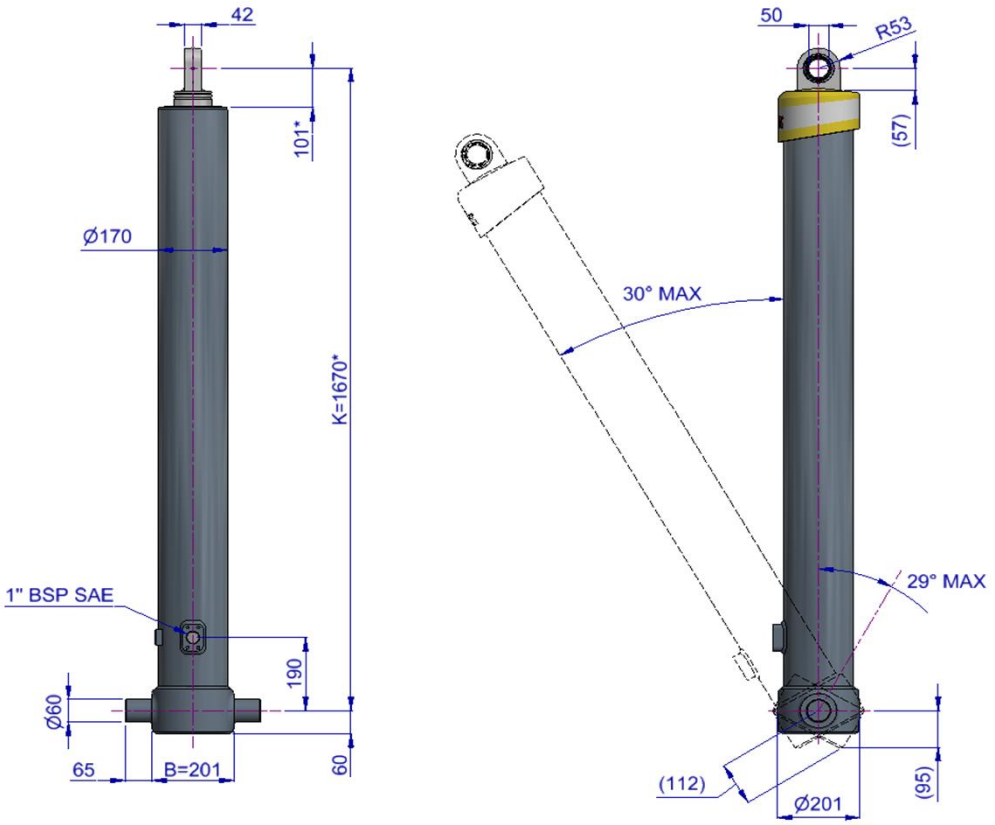

* incl. 20 [-5; +30] mm pull out

3D model is available on request

Specifications

Max. working pressure	220 bar
Weight	195 kg
Working volume	63 L
Total volume	68 L
Max. cyl. load (start tipping)	245 kN
Max. cyl. load (end of stroke)[2]	97 kN
Max. cyl. load (end of stroke)[3]	113 kN

Max. pump flow

With KO[1]	195 L/min
Without KO[1]	137 L/min
With KO[1] below -20°C	137 L/min
Without KO[1] below -20°C	96 L/min

Tipping time

With KO[1]	19 sec
Without KO[1]	28 sec
With KO[1] below -20°C	27 sec
Without KO[1] below -20°C	40 sec
Allowable lowering time	15 sec

Extension	1	2	3	4	5	6	7	Total
Effective diameter [mm]	149	129	110	91				
Stroke* [mm]	1330	1355	1360	1360				5405

Technical notes

● This cylinder is a lifting device only. ● It should not be used as a structural member and should not be subjected to side loads. ● Tipping valve must have a pressure relief at the cylinder port set not higher than max. working pressure. ● Verify max. cyl. load. ● Working temperature range is between -40°C and +80°C. ● Max. duration of extension is 0.5 hours (excluded hard chromed stages). ● Cylinder is painted black (RAL9005) with a min. thickness conforming to the 480 hours neutral salt spray test as per ISO 9227. ● [1] Hyva knock-off. ● [2] Unsubstantial unloading (sticky load). ● [3] Substantial unloading.

Related documentation

Bracket options: 015BRA10 & 015BRA13

Mounting instructions: CYL-0031

Oil specifications: OIL-0011

Spec sheet explanation: CYL-0041

Tipping weight

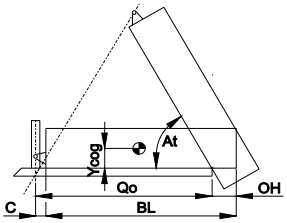

BL	body length
OH	rear overhang
Ycog	vert. pos. centre of gravity
Qo	pivot length
C	bracket length
At	tipping angle
	stroke x 60 / Qo

BL [mm]		7100			6900			6700	
OH [mm]	200	500	800	200	500	800	200	500	800
At [°]	46	48	51	47	50	53	49	52	55
Ycog [mm]									
600	39	42	47	40	44	49	41	45	51
900	42	46	52	43	48	55	44	50	58
1200	45	51		47	53		48	56	

Tipping weight [ton] at maximum pressure of 220 bar for a vertically mounted cylinder and C is 158 mm

For detailed tipping calculations please refer to: https://tipper.hyva.com

Subject to change without notice, no rights reserved

Alpha series - Front end cylinder with single eye

FE A149-4-05405-001-K1670-HD Item no. 70535420

Pos.	Part no.	Description	Qty.
C01	71839121	DUST COVER FE 149-4/157-4	1
P01	74412581	PISTON FL2 S 091-1585-HD-HC	1
P02	71807093 K	SLIDER FL 091 (2 X 1/2) A35	1
P03	71851091 K	OUTER STOPRING FL 091 A22	2
P04	71822705	BOTTOM PLATE PISTON FL 091 MK2 HD	1
P05	01745020 K	CIRCLIP 78 DIN 472 (82.5x2.5)	1
P06	71870215 K	O-RING PISTON BOTTOM 091	1
P07	71847201	PISTON EYE SPH. FL 091 MK2 L=075 GR	1
P08	01226430 K	O-RING 72.62 X 3.53 MM	1
P09	01770085 K	SPHERICAL BEARING D.50.3 DO GREASED	1
P10	01770560 K	CIRCLIP 75 DIN 472 (79.5x3.0)	1
P11	71875012	PIN ROUND HEAD GROOVED 8x15 mm	2
P12	56288044 K	GREASE NIPPLE M8x1 DIN 71412	1
P13	01317670 K	GREASER PROTECTION CAP	1

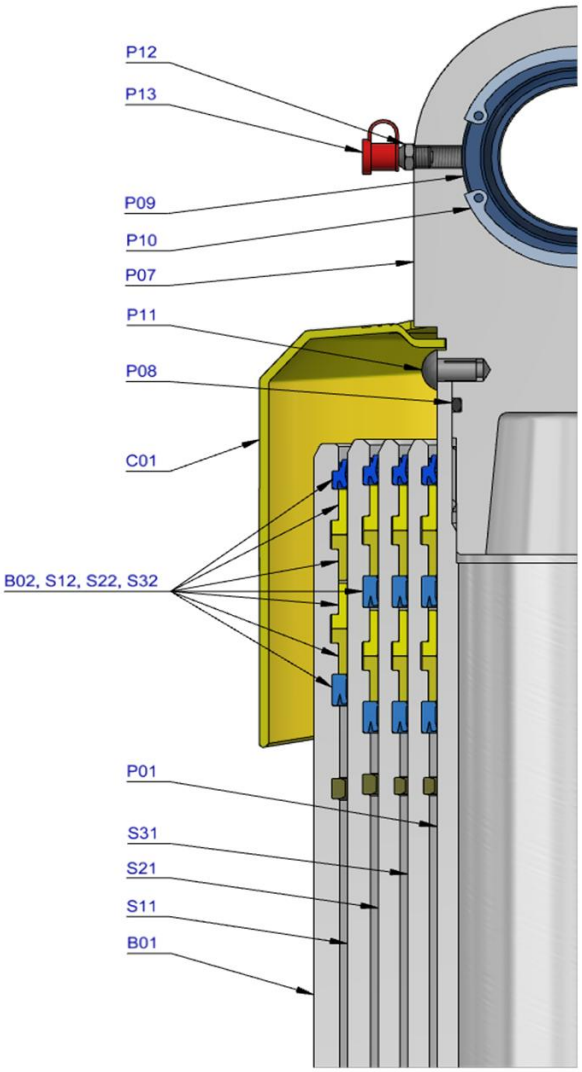

S31	74613580	STAGE FL2 110-1580-HD	1
S32	71808110 K	PACKSET FL 110/HP 110 TANDEM SEAL	1
S33	71807112 K	SLIDER FL 110 (2 X 1/2) A35	1
S34	71851110 K	OUTER STOPRING FL 110 A22	2
S35	71852110 K	LIFTRING FL 110 A22	1
S21	74614580	STAGE FL2 129-1580-HD	1
S22	71808129 K	PACKSET FL 129/HP 129 TANDEM SEAL	1
S23	71807131 K	SLIDER FL 129 (2 X 1/2) A35	1
S24	71851129 K	OUTER STOPRING FL 129 A22	2
S25	71852129 K	LIFTRING FL 129 A22	1
S11	74615580	STAGE FL2 149-1580-HD	1
S12	71808149 K	PACKSET FL 149/HP 150 TANDEM SEAL	1
S13	71807151 K	SLIDER FL 149 A35	1
S14	71851149 K	OUTER STOPRING FL 149 A22	1
S15	71852149 K	LIFTRING FL 149 A22	1
B01	74516580	BASE FL2 169-1619-4/4BSAE-190-HD	1
B02	71802169 K	PACKSET FL 169	1
B03	71825425	BOTTOM PLATE FL2 169	1
B04	71870035 K	SEAL BOTTOM PLATE FL 169	1
B05	71820169	LOCKING PLATE FL 169	3
B06	01732055 K	BOLT HEX M8X20X1.25 SET 6 PCS	1
B07	01732559 K	WASHER SPRING M8 SET 6 PCS	1

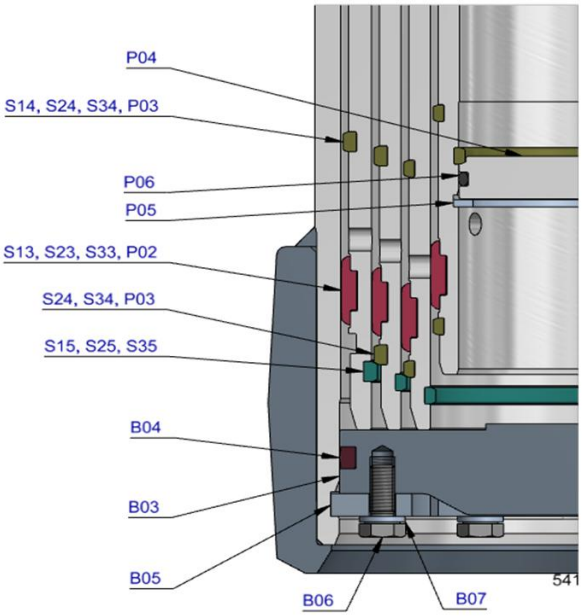

Seal kit complete

	71908541 K	Consists of all packsets with packset grease and O-rings	

Notes

The inner stopring is pre-mounted in the grooves on spare bases and stages. Therefore, when ordering new tubes, it is not required to order inner stoprings separately.

For repair instructions see: CYL-0040. Serial no. is located on type plate and near type plate support.

Subject to change without notice, no rights reserved