Alpha series - Front end cylinder with single eye

FE A191-4-05460-011-K1672	Item no.	70547420
	Tipping weight	89 - 96 ton

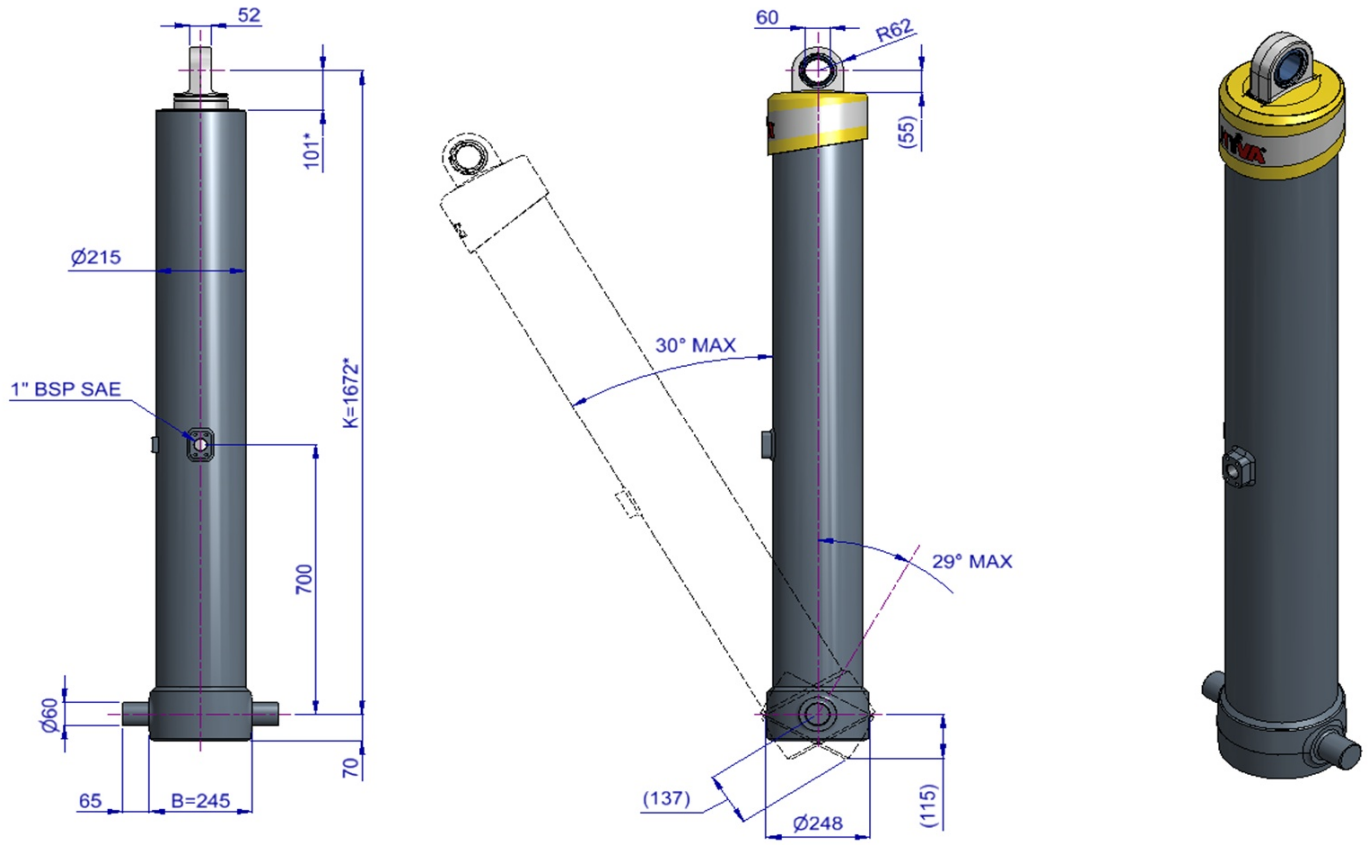

* incl. 20 [-5; +30] mm pull out

3D model is available on request

Specifications

Max. working pressure	250 bar
Weight	281 kg
Working volume	111 L
Total volume	119 L
Max. cyl. load (start tipping)	440 kN
Max. cyl. load (end of stroke)[2]	254 kN
Max. cyl. load (end of stroke)[3]	296 kN

Max. pump flow

With KO[1]	190 L/min
Without KO[1]	170 L/min
With KO[1] below -20°C	133 L/min
Without KO[1] below -20°C	119 L/min

Tipping time

With KO[1]	35 sec
Without KO[1]	39 sec
With KO[1] below -20°C	50 sec
Without KO[1] below -20°C	56 sec
Allowable lowering time	35 sec

Extension	1	2	3	4	5	6	7	Total
Effective diameter [mm]	191	169	149	129				
Stroke* [mm]	1350	1370	1370	1370				5460

Technical notes

● This cylinder is a lifting device only. ● It should not be used as a structural member and should not be subjected to side loads. ● Tipping valve must have a pressure relief at the cylinder port set not higher than max. working pressure. ● Verify max. cyl. load. ● Working temperature range is between -40°C and +80°C. ● Max. duration of extension is 0.5 hours (excluded hard chromed stages). ● Cylinder is painted black (RAL9005) with a min. thickness conforming to the 480 hours neutral salt spray test as per ISO 9227. ● [1] Hyva knock-off. ● [2] Unsubstantial unloading (sticky load). ● [3] Substantial unloading.

Related documentation

Bracket options: 015BRA10 & 015BRA13

Mounting instructions: CYL-0031

Oil specifications: OIL-0011

Spec sheet explanation: CYL-0041

Tipping weight

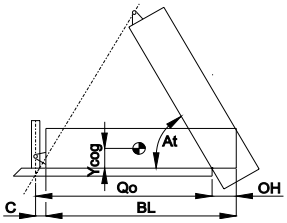

BL	body length
OH	rear overhang
Ycog	vert. pos. centre of gravity
Qo	pivot length
C	bracket length
At	tipping angle
	stroke x 60 / Qo

BL [mm]		7200			6950			6700	
OH [mm]	200	500	800	200	500	800	200	500	800
At [°]	46	48	50	48	50	53	50	52	55
Ycog [mm]									
600	89	96		91			93		
900									
1200									

Tipping weight [ton] at maximum pressure of 250 bar for a vertically mounted cylinder and C is 158 mm

For detailed tipping calculations please refer to: https://tipper.hyva.com

Subject to change without notice, no rights reserved

Alpha series - Front end cylinder with single eye

FE A191-4-05460-011-K1672 Item no. 70547420

Pos.	Part no.	Description	Qty.
C01	71839133	DUST COVER FE 179-4/191-4	1
P01	74404581	PISTON FL2 S 129-1585-HC	1
P02	71853129 K	SLIDER FL 129 (2 X 1/2) A22	1
P03	71851129 K	OUTER STOPRING FL 129 A22	1
P04	71822129	BOTTOM PLATE PISTON FL 129	1
P05	01745052 K	CIRCLIP 120 DIN 472 (127.0x4.0)	1
P06	71870225 K	O-RING PISTON BOTTOM 129	1
P07	71847400	PISTON EYE SPH. FL 129 MK2 L=075	1
P08	71870125 K	O-RING 110.72 X 3.53 MM	1
P09	71875460 K	SPHERICAL BEARING D.60 MAINT. FREE	1
P10	01770580 K	CIRCLIP 90 DIN 472 (95.5x3.5)	1
P11	71875012	PIN ROUND HEAD GROOVED 8x15 mm	2
S31	74605580	STAGE FL2 149-1580	1
S32	71802149 K	PACKSET FL 149/HP 150	1
S33	71807151 K	SLIDER FL 149 A35	1
S34	71851149 K	OUTER STOPRING FL 149 A22	1
S35	71852149 K	LIFTRING FL 149 A22	1
S21	74606580	STAGE FL2 169-1580	1
S22	71802169 K	PACKSET FL 169	1
S23	71807171 K	SLIDER FL 169 A35	1
S24	71851169 K	OUTER STOPRING FL 169 A22	1
S25	71813169 K	LIFTRING FL 169x5	1
S11	74607580	STAGE FL2 191-1580	1
S12	71802191 K	PACKSET FL 191	1
S13	71807193 K	SLIDER FL 191 A35	1
S14	71851191 K	OUTER STOPRING FL 191 A22	1
S15	71813191 K	LIFTRING FL 191x5	1
B01	74508588	BASE FL2 214-1631-4/4BSAE-700	1
B02	71802214 K	PACKSET FL 214	1
B03	71825435	BOTTOM PLATE FL2 214	1
B04	71870045 K	SEAL BOTTOM PLATE FL 214	1
B05	71820214	LOCKING PLATE FL 214	3
B06	01732020 K	BOLT HEX M12X25X1.25 SET 6 PCS	1
B07	01732523 K	WASHER SPRING M12 SET 6 PCS	1

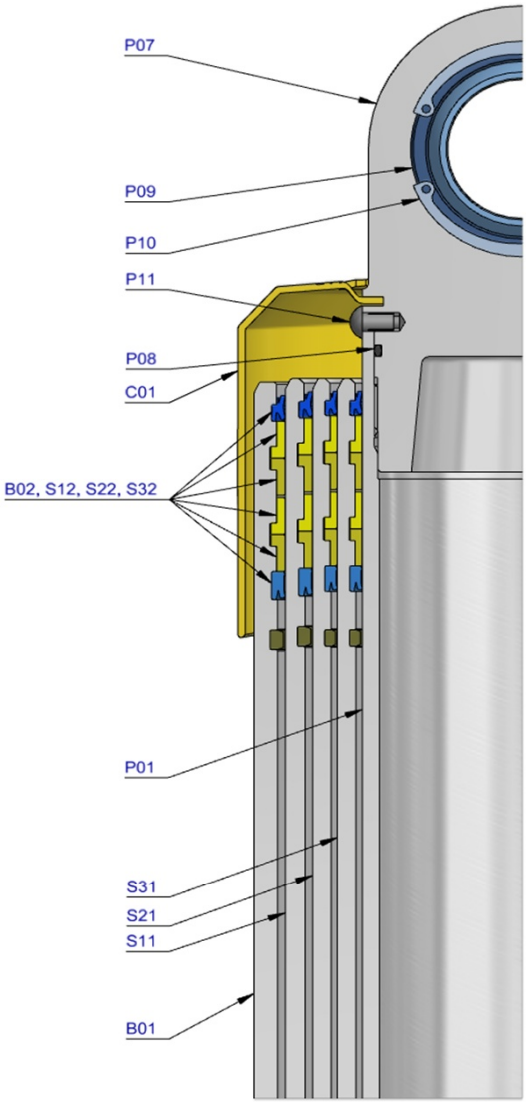

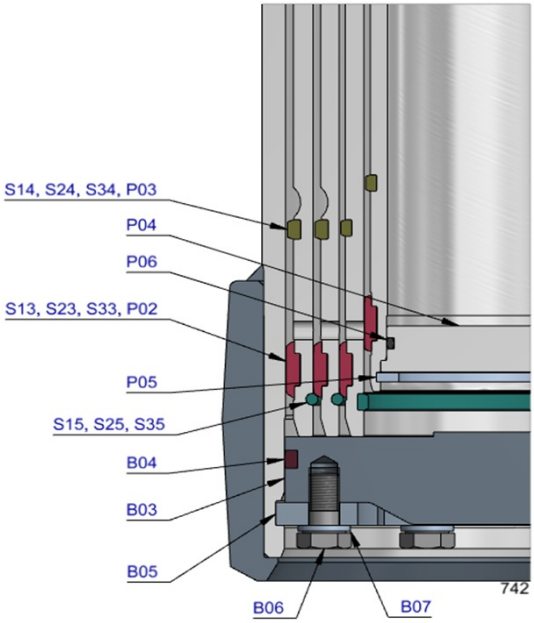

Seal kit complete

	71908740 K	Consists of all packsets with packset grease and O-rings	

Notes

The inner stopring is pre-mounted in the grooves on spare bases and stages.Therefore, when ordering new tubes, it is not required to order inner stoprings separately.

For repair instructions see: CYL-0040. Serial no. is located on type plate and near type plate support.

Subject to change without notice, no rights reserved