Alpha series - Front end cylinder with single eye

FE A179-5-06230-011-K1537	Item no.	70147504
	Tipping weight	40 - 69 ton

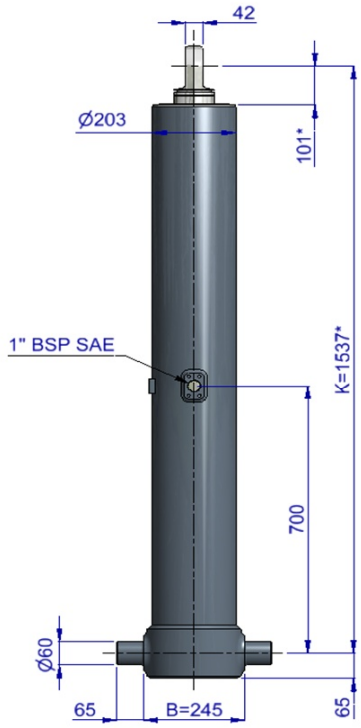

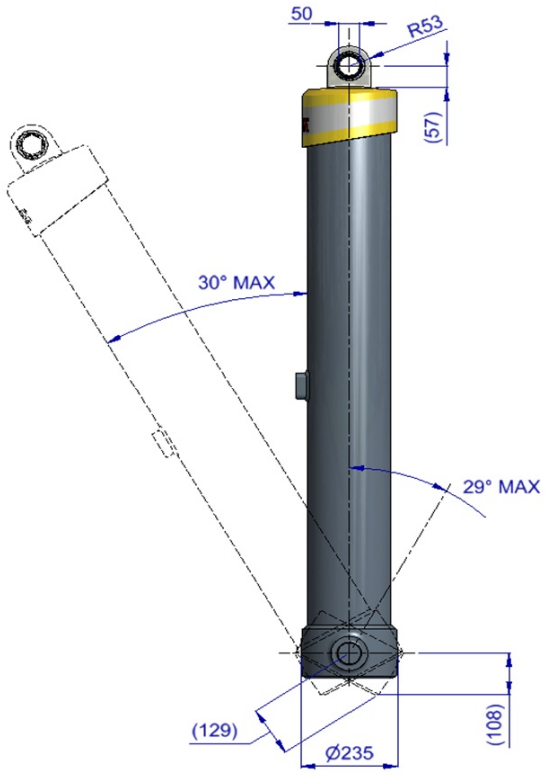

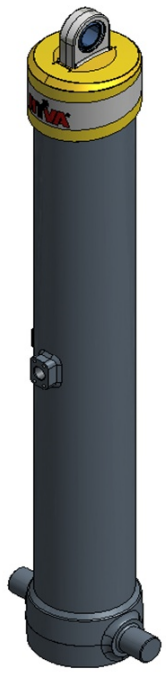

* incl. 20 [-5; +30] mm pull out

3D model is available on request

Specifications

Max. working pressure	190	bar
Weight	258	kg
Working volume	97	L
Total volume	105	L
Max. cyl. load (start tipping)	295	kN
Max. cyl. load (end of stroke)[2]	118	kN
Max. cyl. load (end of stroke)[3]	138	kN

Max. pump flow

With KO[1]	190	L/min
Without KO[1]	162	L/min
With KO[1] below -20°C	133	L/min
Without KO[1] below -20°C	113	L/min

Tipping time

With KO[1]	31	sec
Without KO[1]	36	sec
With KO[1] below -20°C	44	sec
Without KO[1] below -20°C	51	sec
Allowable lowering time	31	sec

Extension	1	2	3	4	5	6	7	Total
Effective diameter [mm]	179	157	137	118	99			
Stroke* [mm]	1230	1250	1250	1250	1250			6230

Technical notes

● This cylinder is a lifting device only. ● It should not be used as a structural member and should not be subjected to side loads. ● Tipping valve must have a pressure relief at the cylinder port set not higher than max. working pressure. ● Verify max. cyl. load. ● Working temperature range is between -40°C and +80°C. ● Max. duration of extension is 0.5 hours (excluded hard chromed stages). ● Cylinder is painted black (RAL9005) with a min. thickness conforming to the 480 hours neutral salt spray test as per ISO 9227. ● [1] Hyva knock-off. ● [2] Unsubstantial unloading (sticky load). ● [3] Substantial unloading.

Related documentation

Bracket options: 015BRA10 & 015BRA13

Mounting instructions: CYL-0031

Oil specifications: OIL-0011

Spec sheet explanation: CYL-0041

Tipping weight

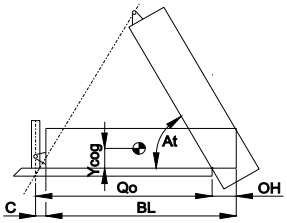

BL	body length
OH	rear overhang
Ycog	vert. pos. centre of gravity
Qo	pivot length
C	bracket length
At	tipping angle
	stroke x 60 / Qo

BL [mm]		8200			7850			7500	
OH [mm]	200	500	800	200	500	800	200	500	800
At [°]	46	48	50	48	50	52	50	53	55
Ycog [mm]									
600	40	43	47	41	45	50	43	47	53
900	43	47	52	45	49	55	47	52	60
1200	46	51	57	48	54	62	51	59	69

Tipping weight [ton] at maximum pressure of 190 bar for a vertically mounted cylinder and C is 158 mm

For detailed tipping calculations please refer to: https://tipper.hyva.com

Subject to change without notice, no rights reserved

Alpha series - Front end cylinder with single eye

FE A179-5-06230-011-K1537 Item no. 70147504

Pos.	Part no.	Description	Qty.
C01	71839131	DUST COVER FE 169-5/179-5/191-6	1
P01	70463441	PISTON MN2 S 099-1445-HC	1
P02	70209310 K	SLIDER MN 099 (2 x 1/2) A22	1
P03	70216099 K	OUTER STOPRING MN 099 A22	1
P04	70224099	BOTTOM PLATE PISTON MN 099	1
P05	01770580 K	CIRCLIP 90 DIN 472 (95.5x3.5)	1
P06	70260215 K	O-RING PISTON BOTTOM 099	1
P07	70235400	PISTON EYE SPH. MN 099 MK2 L=075	1
P08	70260115 K	O-RING 82.14 X 3.53 MM	1
P09	71875450 K	SPHERICAL BEARING D.50 MAINT. FREE	1
P10	01770560 K	CIRCLIP 75 DIN 472 (79.5x3.0)	1
P11	71875012	PIN ROUND HEAD GROOVED 8x15 mm	2
S41	70664440	STAGE MN2 118-1440	1
S42	70203118 K	PACKSET MN 118	1
S43	70209320 K	SLIDER MN 118 (2 x 1/2) A22	1
S44	70216118 K	OUTER STOPRING MN 118 A22	1
S45	70217118 K	LIFTRING MN 118 A22	1
S31	70665440	STAGE MN2 137-1440	1
S32	70203137 K	PACKSET MN 137	1
S33	70207137 K	SLIDER MN 137 A35	1
S34	70216137 K	OUTER STOPRING MN 137 A22	1
S35	70217137 K	LIFTRING MN 137 A22	1
S21	70666440	STAGE MN2 157-1440	1
S22	70203157 K	PACKSET MN 157	1
S23	70207157 K	SLIDER MN 157 A35	1
S24	70216157 K	OUTER STOPRING MN 157 A22	1
S25	70213157 K	LIFTRING MN 157x5 MK2	1
S11	70667440	STAGE MN2 179-1440	1
S12	70203179 K	PACKSET MN 179	1
S13	70207179 K	SLIDER MN 179 A35	1
S14	70216179 K	OUTER STOPRING MN 179 A22	1
S15	70213179 K	LIFTRING MN 179x5 MK2	1
B01	70368448	BASE MN2 202-1491-4/4BSAE-700	1
B02	70203202 K	PACKSET MN 202	1
B03	70225365	BOTTOM PLATE MN2 202	1
B04	70270202 K	SEAL BOTTOM PLATE MN 202	1
B05	70220205	LOCKING PLATE MN2 202	3
B06	01732020 K	BOLT HEX M12X25X1.25 SET 6 PCS	1
B07	01732523 K	WASHER SPRING M12 SET 6 PCS	1

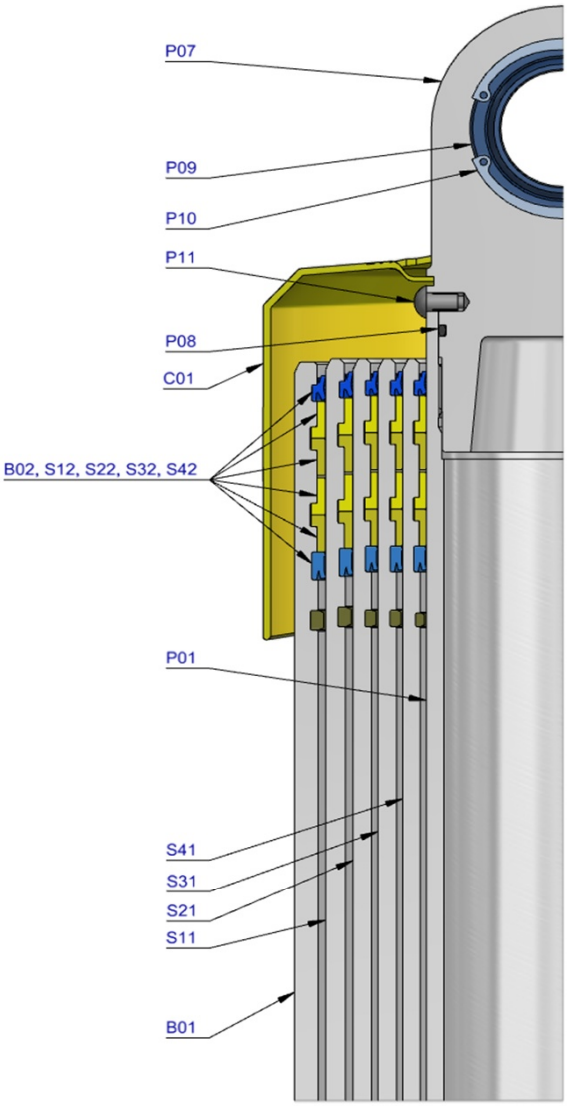

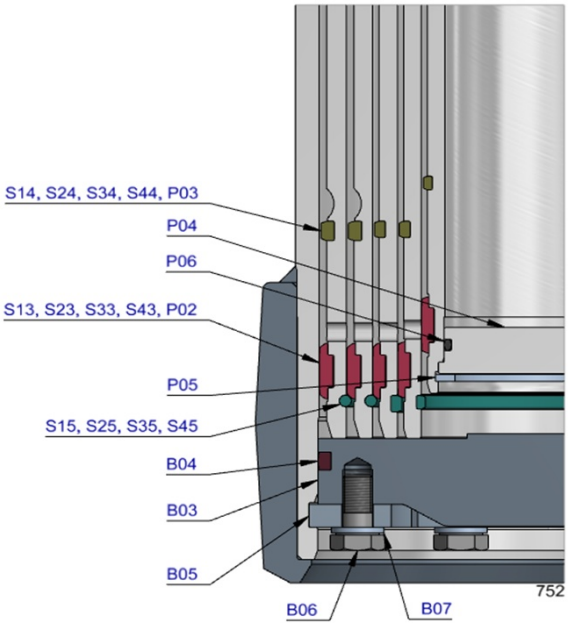

Seal kit complete

	71907750 K	Consists of all packsets with packset grease and O-rings	

Notes

The inner stopring is pre-mounted in the grooves on spare bases and stages.Therefore, when ordering new tubes, it is not required to order inner stoprings separately.

For repair instructions see: CYL-0040. Serial no. is located on type plate and near type plate support.

Subject to change without notice, no rights reserved