Alpha series - Front end cylinder with single eye

FE A157-5-05830-019-K1529	Item no.	70146504
	Tipping weight	26 - 47 ton

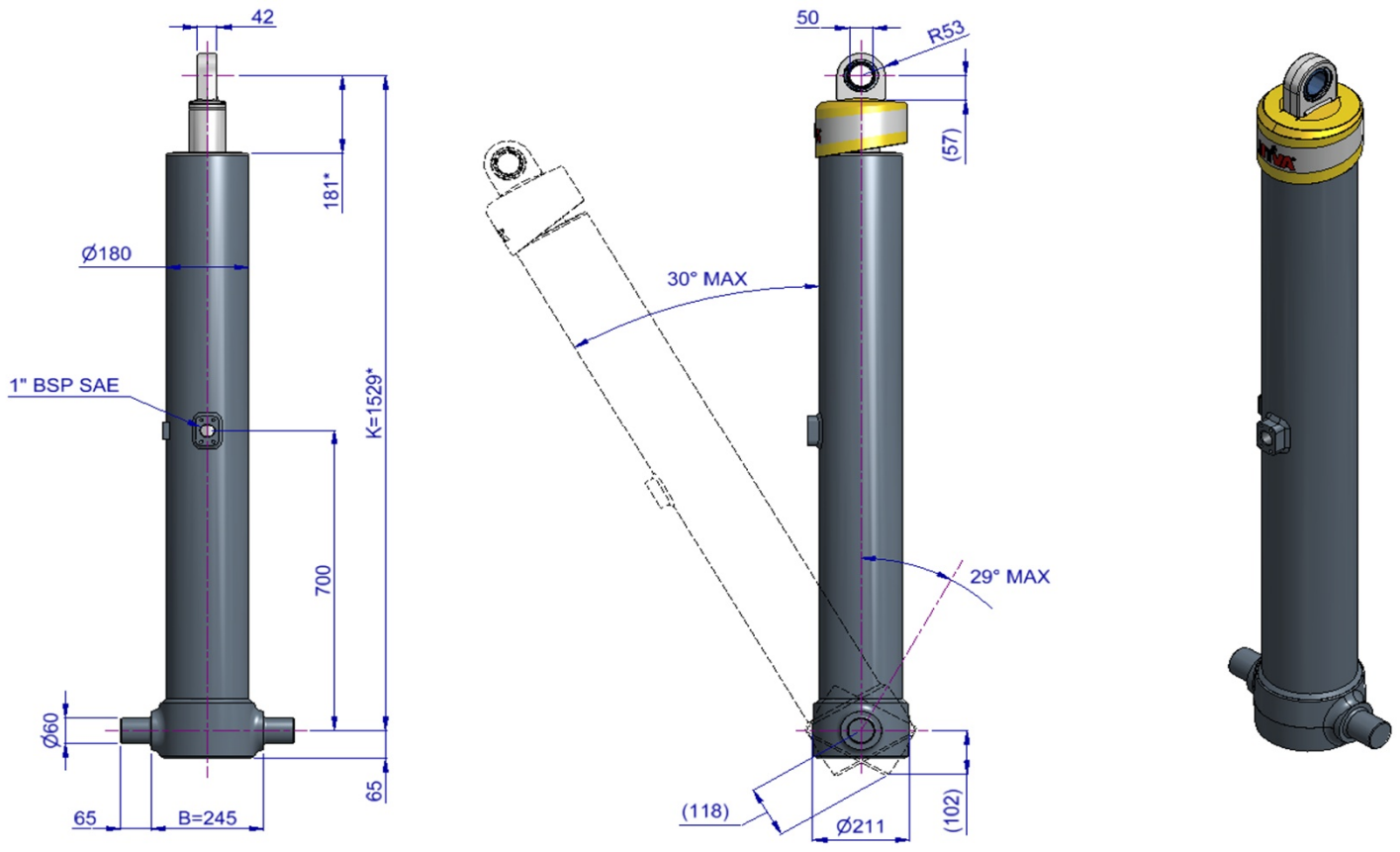

* incl. 20 [-5; +30] mm pull out

3D model is available on request

Specifications

Max. working pressure	190 bar	Max. pump flow (with KO)	151 L/min	Resulting tipping time (with KO)	27 sec
Weight	205 kg	Max. pump flow (without KO)	106 L/min	Resulting tipping time (without KO)	38 sec
Working volume	67 L			Allowable lowering time	27 sec
Total volume	73 L				
Max. cyl. load (start tipping)	205 kN				
Max. cyl. load (end of stroke)	129 kN				

KO: Hyva pneumatic knock off

Extension	1	2	3	4	5	6	7	Total
Effective diameter [mm]	157	137	118	99	80			
Stroke* [mm]	1150	1170	1170	1170	1170			5830

Technical notes

● This cylinder is a lifting device only. It should not be used as a structural member and should not be subjected to side loads. ● When the cylinder is mounted at an angle, the maximum tipping weight could be reduced. ● Maximum backwards angle of rotation during operation is 29 deg. ● Working pressure depends on the application, but must never exceed the maximum working pressure stated. ● Working temperature range is between -40°C and +80°C. ● Maximum duration of extension is 0.5 hours (excluding hard chromed stages). ● Cylinder is painted black (RAL9005) with a thickness conforming to the 480 hours neutral salt spray test as per ISO 9227 (ISO 10289, rating 9).

Related documentation

Bracket options: 015BRA10 & 015BRA13 | Mounting instructions: CYL-0031 | Oil specifications: OIL-0011

Tipping weight

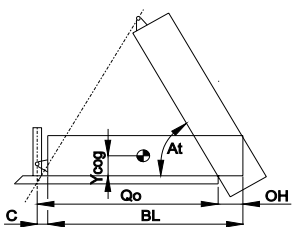

BL	body length
OH	rear overhang
Ycog	vert. pos. centre of gravity
Qo	pivot length
C	bracket length
At	tipping angle
	stroke x 60 / Qo

BL	7700			7400			7100	
OH	200	500	800	200	500	800	200	500	800
At	46	48	50	48	50	52	50	52	55
Ycog									
600	26	29	32	27	30	33	28	31	35
900	28	31	35	29	33	37	31	35	40
1200	31	34	39	32	36	42	34	39	47

Tipping weight at maximum pressure of 190 bar for a vertically mounted cylinder and C is 158 mm

For detailed tipping calculations please refer to: https://tipper.hyva.com

Subject to change without notice, no rights reserved

Alpha series - Front end cylinder with single eye

FE A157-5-05830-019-K1529 Item no. 70146504

Pos.	Part no.	Description	Qty.
C01	71839122	DUST COVER FE 157-5	1
P01	70462441	PISTON MN2 S 080-1445-HC	1
P02	70209300 K	SLIDER MN 080 (2 x 1/2) A22	1
P03	70216080 K	OUTER STOPRING MN 080 A22	1
P04	70224080	BOTTOM PLATE PISTON MN 080	1
P05	01745035 K	CIRCLIP 70 DIN 472 (74.5x2.5)	1
P06	70260210 K	O-RING PISTON BOTTOM 080	1
P07	70235300	PISTON EYE SPH. MN 080 MK2 L=075	1
P08	70260110 K	O-RING 63.09 X 3.53 MM	1
P09	71875450 K	SPHERICAL BEARING D.50 MAINT. FREE	1
P10	01770560 K	CIRCLIP 75 GE 50 DO DIN 472	1
P11	71875012	PIN ROUND HEAD GROOVED 8x15 mm	2
S41	70663370	STAGE MN2 099-1360	1
S42	70203099 K	PACKSET MN 099	1
S43	70209310 K	SLIDER MN 099 (2 x 1/2) A22	1
S44	70216099 K	OUTER STOPRING MN 099 A22	1
S45	70217099 K	LIFTRING MN 099 A22	1
S31	70664370	STAGE MN2 118-1360	1
S32	70203118 K	PACKSET MN 118	1
S33	70209320 K	SLIDER MN 118 (2 x 1/2) A22	1
S34	70216118 K	OUTER STOPRING MN 118 A22	1
S35	70217118 K	LIFTRING MN 118 A22	1
S21	70665370	STAGE MN2 137-1360	1
S22	70203137 K	PACKSET MN 137	1
S23	70207137 K	SLIDER MN 137 A35	1
S24	70216137 K	OUTER STOPRING MN 137 A22	1
S25	70217137 K	LIFTRING MN 137 A22	1
S11	70666370	STAGE MN2 157-1360	1
S12	70203157 K	PACKSET MN 157	1
S13	70207157 K	SLIDER MN 157 A35	1
S14	70216157 K	OUTER STOPRING MN 157 A22	1
S15	70213157 K	LIFTRING MN 157x5 MK2	1
B01	70367378	BASE MN2 179-1403-4/4BSAE-700	1
B02	70203179 K	PACKSET MN 179	1
B03	70225360	BOTTOM PLATE MN2 179	1
B04	70270179 K	SEAL BOTTOM PLATE MN 179	1
B05	70220185	LOCKING PLATE MN2 179	3
B06	01732055 K	BOLT HEX M8X20X1.25 SET 6PCS	1
B07	01732559 K	WASHER SPRING M8 SET 6PCS	1

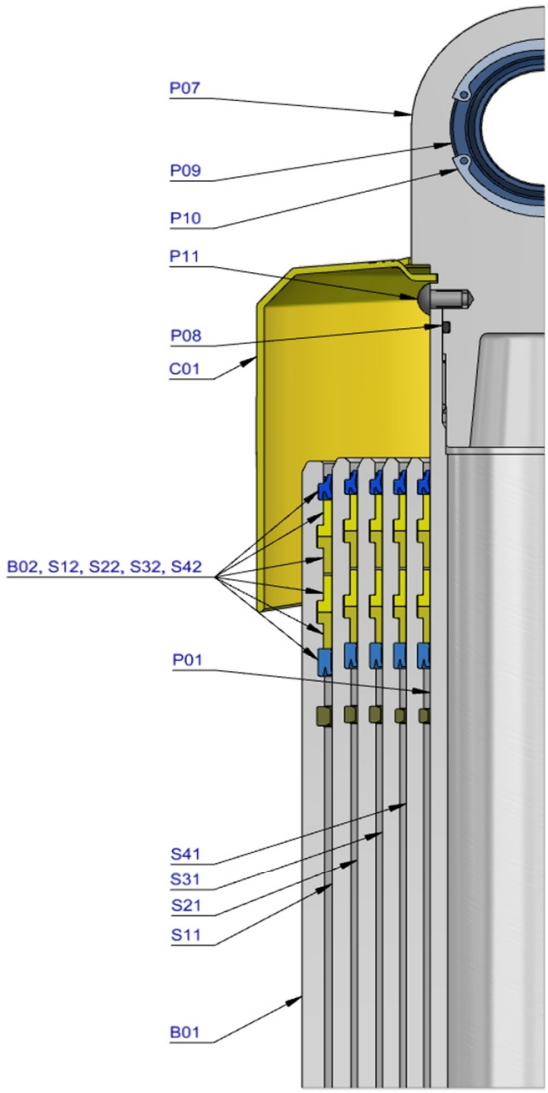

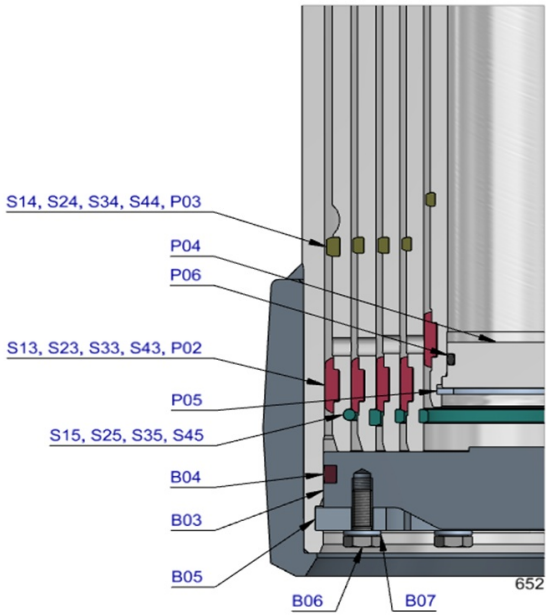

Seal kit complete

	71907650 K	Consists of all packsets with packset grease and O-rings	

Notes

The inner, outer stoprings and liftrings are pre-mounted in the grooves on spare stages and pistons. Therefore, when ordering new tubes, it is not required to order stoprings separately.

For repair instructions see: CYL-0041. Serial no. is located on type plate and below type plate support.

Subject to change without notice, no rights reserved