Alpha series - Front end cylinder with outer cover

FC A179-5-07025-014-K1300-HD	Item no.	70117586
	Tipping weight	40 - 57 ton

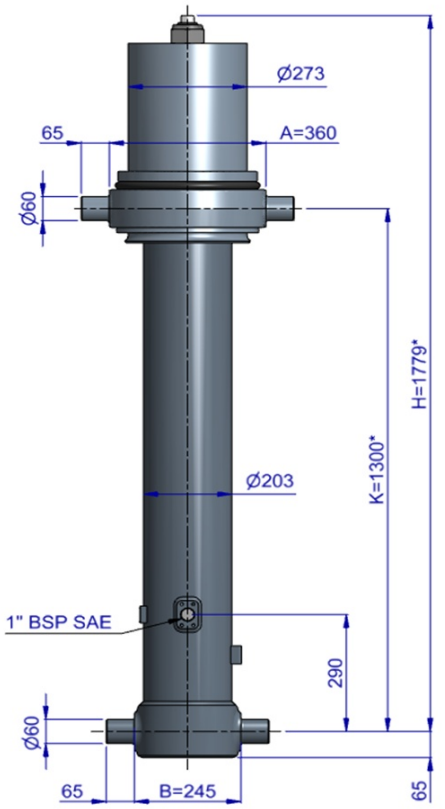

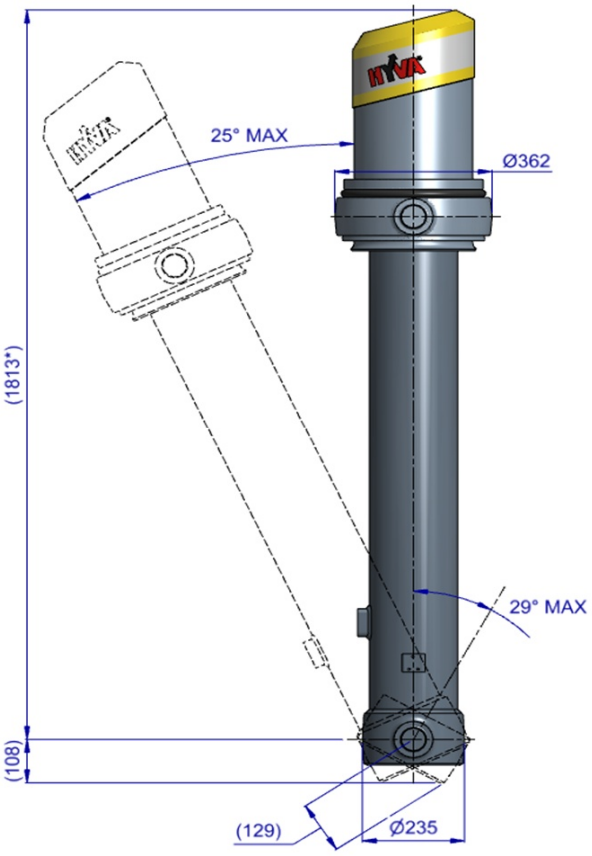

* incl. 20 [-5; +30] mm pull out

3D model is available on request

Specifications

Max. working pressure	190 bar
Weight	353 kg
Working volume	109 L
Total volume	118 L
Max. cyl. load (start tipping)	295 kN
Max. cyl. load (end of stroke)[2]	115 kN
Max. cyl. load (end of stroke)[3]	134 kN

Max. pump flow

With KO[1]	220 L/min
Without KO[1]	162 L/min
With KO[1] below -20°C	154 L/min
Without KO[1] below -20°C	113 L/min

Tipping time

With KO[1]	30 sec
Without KO[1]	40 sec
With KO[1] below -20°C	43 sec
Without KO[1] below -20°C	57 sec
Allowable lowering time	24 sec

Extension	1	2	3	4	5	6	7	Total
Effective diameter [mm]	179	157	137	118	99			
Stroke* [mm]	1380	1405	1410	1415	1415			7025

Technical notes

● This cylinder is a lifting device only. ● It should not be used as a structural member and should not be subjected to side loads. ● Tipping valve must have a pressure relief at the cylinder port set not higher than max. working pressure. ● Verify max. cyl. load. ● Working temperature range is between -40°C and +80°C. ● Max. duration of extension is 0.5 hours (excluded hard chromed stages). ● Cylinder is painted black (RAL9005) with a min. thickness conforming to the 480 hours neutral salt spray test as per ISO 9227. ● [1] Hyva knock-off. ● [2] Unsubstantial unloading (sticky load). ● [3] Substantial unloading.

Related documentation

Bracket options: 015BRA10 & 015BRA12

Mounting instructions: CYL-0030

Oil specifications: OIL-0011

Spec sheet explanation: CYL-0041

Tipping weight

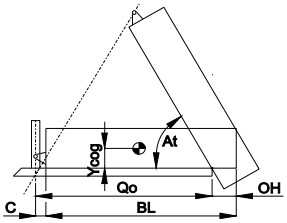

BL	body length
OH	rear overhang
Ycog	vert. pos. centre of gravity
Qo	pivot length
C	bracket length
At	tipping angle
	stroke x 60 / Qo

BL [mm]		9300			9050			8800	
OH [mm]	200	500	800	200	500	800	200	500	800
At [°]	45	46	48	46	48	50	48	49	51
Ycog [mm]									
600	40	42	45	40	43	46	41	44	48
900	42	45	48	43	46	50	44	47	52
1200	44	48	52	45	49	55	47	51	57

Tipping weight [ton] at maximum pressure of 190 bar for a vertically mounted cylinder and C is 229 mm

For detailed tipping calculations please refer to: https://tipper.hyva.com

Subject to change without notice, no rights reserved

Alpha series - Front end cylinder with outer cover

FC A179-5-07025-014-K1300-HD Item no. 70117586

Pos.	Part no.	Description	Qty.
C01	71839050	DUST COVER FC LOW 15-273	1
C02	71737108	COVER 273-0495 PIN60 A360 SPH LOCK	1
C03	01702956 K	WASHER M48 DIN 125B ZP	1
C04	01702907 K	TOPNUT NYLOC M48x3 DIN 985 ZP	1
C05	01791953	O-RING COVER D.273	1
C06	15014550 K	BOLT HSHC M12X30X1.75 Q8.8 DIN 912 ZP	1
P01	70473641	PISTON MN2 S 099-1645-HD-HC	1
P02	70207099 K	SLIDER MN 099 (2 x 1/2) A35	1
P03	70216099 K	OUTER STOPRING MN 099 A22	2
P04	70230099	BOTTOM PLATE PISTON MN 099 MK2 HD	1
P05	01745042 K	CIRCLIP 85 DIN 472 (90.5x3.0)	1
P06	70260215 K	O-RING PISTON BOTTOM 099	1
P07	70232400	PISTON HEAD MN 099 MK2	1
P08	70260115 K	O-RING 82.14 X 3.53 MM	1

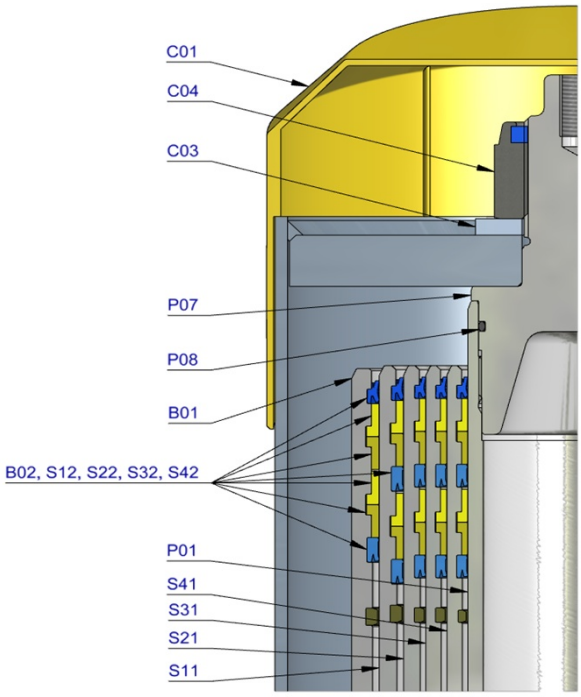

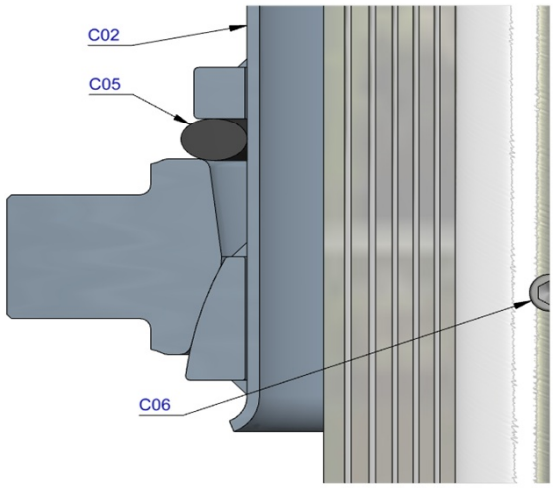

S41	70674640	STAGE MN2 118-1640-HD	1
S42	70202118 K	PACKSET MN 118 TANDEM SEAL	1
S43	70207118 K	SLIDER MN 118 (2 x 1/2) A35	1
S44	70216118 K	OUTER STOPRING MN 118 A22	2
S45	70217118 K	LIFTRING MN 118 A22	1
S31	70675640	STAGE MN2 137-1640-HD	1
S32	70202137 K	PACKSET MN 137 TANDEM SEAL	1
S33	70207137 K	SLIDER MN 137 A35	1
S34	70216137 K	OUTER STOPRING MN 137 A22	2
S35	70217137 K	LIFTRING MN 137 A22	1
S21	70676640	STAGE MN2 157-1640-HD	1
S22	70202157 K	PACKSET MN 157 TANDEM SEAL	1
S23	70207157 K	SLIDER MN 157 A35	1
S24	70216157 K	OUTER STOPRING MN 157 A22	2
S25	70217157 K	LIFTRING MN 157 A22	1
S11	70677640	STAGE MN2 179-1640-HD	1
S12	70202179 K	PACKSET MN 179 TANDEM SEAL	1
S13	70207179 K	SLIDER MN 179 A35	1
S14	70216179 K	OUTER STOPRING MN 179 A22	1
S15	70217179 K	LIFTRING MN 179 A22	1
B01	70378654	BASE MN2 202-1691-4/4BSAE-290-HD	1
B02	70203202 K	PACKSET MN 202	1
B03	70225365	BOTTOM PLATE MN2 202	1
B04	70270202 K	SEAL BOTTOM PLATE MN 202	1
B05	70220205	LOCKING PLATE MN2 202	3
B06	01732020 K	BOLT HEX M12X25X1.25 SET 6 PCS	1
B07	01732523 K	WASHER SPRING M12 SET 6 PCS	1

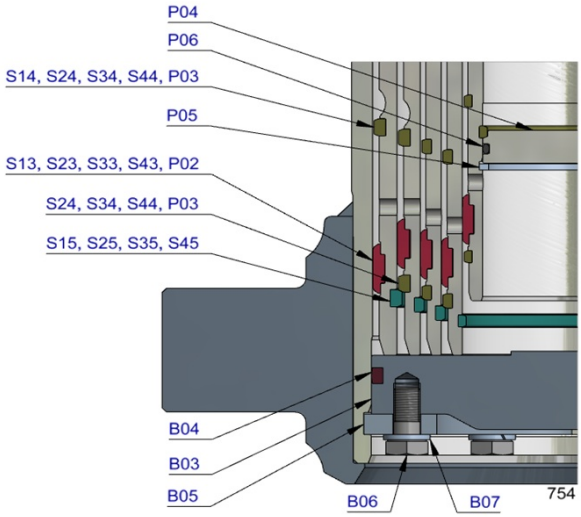

Seal kit complete

	71907751 K	Consists of all packsets with packset grease and O-rings	

Notes

The inner stopring is pre-mounted in the grooves on spare bases and stages.Therefore, when ordering new tubes, it is not required to order inner stoprings separately.

For repair instructions see: CYL-0040. Serial no. is located on type plate and near type plate support.

Subject to change without notice, no rights reserved