Alpha series - Front end cylinder with outer cover

FC A179-5-07025-000-K0343-HD	Item no.	70117580
	Tipping weight	52 - 67 ton

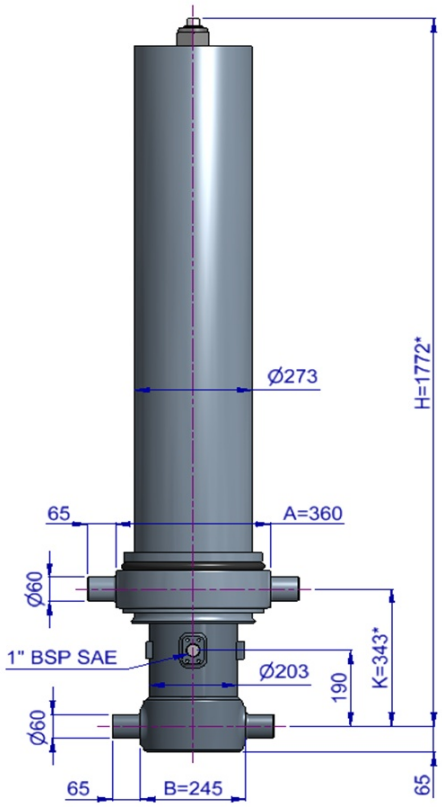

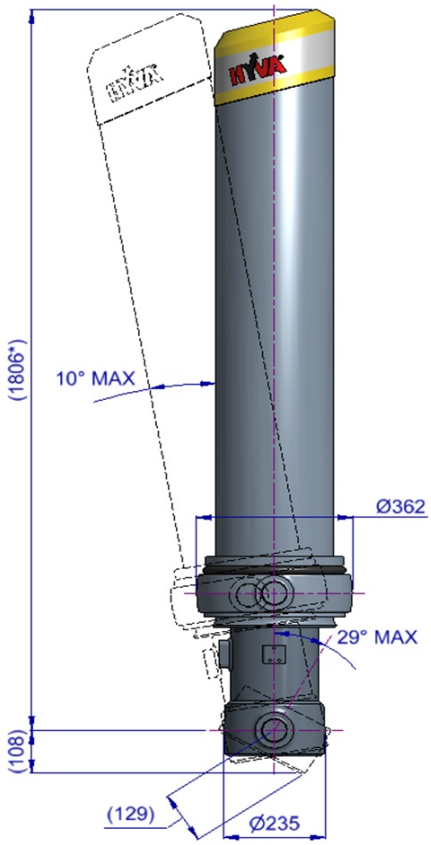

* incl. 20 [-5; +30] mm pull out

3D model is available on request

Specifications

Max. working pressure	250 bar
Weight	393 kg
Working volume	109 L
Total volume	118 L
Max. cyl. load (start tipping)	295 kN

Max. pump flow

With KO[1]	220 L/min
Without KO[1]	162 L/min
With KO[1] below -20°C	154 L/min
Without KO[1] below -20°C	113 L/min

Tipping time

With KO[1]	30 sec
Without KO[1]	40 sec
With KO[1] below -20°C	43 sec
Without KO[1] below -20°C	57 sec
Allowable lowering time	24 sec

Extension	1	2	3	4	5	6	7	Total
Effective diameter [mm]	179	157	137	118	99			
Stroke* [mm]	1380	1405	1410	1415	1415			7025

Technical notes

● This cylinder is a lifting device only. ● It should not be used as a structural member and should not be subjected to side loads. ● Tipping valve must have a pressure relief at the cylinder port set not higher than max. working pressure. ● Verify max. cyl. load. ● Working temperature range is between -40°C and +80°C. ● Max. duration of extension is 0.5 hours (excluded hard chromed stages). ● Cylinder is painted black (RAL9005) with a min. thickness conforming to the 480 hours neutral salt spray test as per ISO 9227. ● [1] Hyva knock-off.

Related documentation

Bracket options: 015BRA10 & 015BRA12

Mounting instructions: CYL-0030

Oil specifications: OIL-0011

Spec sheet explanation: CYL-0041

Tipping weight

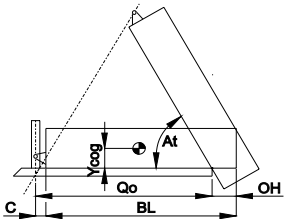

BL	body length
OH	rear overhang
Ycog	vert. pos. centre of gravity
Qo	pivot length
C	bracket length
At	tipping angle
	stroke x 60 / Qo

BL [mm]		9400			9050			8700	
OH [mm]	200	500	800	200	500	800	200	500	800
At [°]	44	45	47	46	47	49	48	49	51
Ycog [mm]									
600	52	56	59	54	57	62	55	59	64
900	55	59	64	57	61	67	59	64	
1200	58	63		60			63		

Tipping weight [ton] at maximum pressure of 250 bar for a vertically mounted cylinder and C is 229 mm

For detailed tipping calculations please refer to: https://tipper.hyva.com

Subject to change without notice, no rights reserved

Alpha series - Front end cylinder with outer cover

FC A179-5-07025-000-K0343-HD Item no. 70117580

Pos.	Part no.	Description	Qty.
C01	71839050	DUST COVER FC LOW 15-273	1
C02	71737632	COVER 273-1445 PIN60 A360 SPH LOCK	1
C03	01702956 K	WASHER M48 DIN 125B ZP	1
C04	01702907 K	TOPNUT NYLOC M48x3 DIN 985 ZP	1
C05	01791953	O-RING COVER D.273	1
C06	15014550 K	BOLT HSHC M12X30X1.75 Q8.8 DIN 912 ZP	1
P01	70473641	PISTON MN2 S 099-1645-HD-HC	1
P02	70207099 K	SLIDER MN 099 (2 x 1/2) A35	1
P03	70216099 K	OUTER STOPRING MN 099 A22	2
P04	70230099	BOTTOM PLATE PISTON MN 099 MK2 HD	1
P05	01745042 K	CIRCLIP 85 DIN 472 (90.5x3.0)	1
P06	70260215 K	O-RING PISTON BOTTOM 099	1
P07	70232400	PISTON HEAD MN 099 MK2	1
P08	70260115 K	O-RING 82.14 X 3.53 MM	1
S41	70674640	STAGE MN2 118-1640-HD	1
S42	70202118 K	PACKSET MN 118 TANDEM SEAL	1
S43	70207118 K	SLIDER MN 118 (2 x 1/2) A35	1
S44	70216118 K	OUTER STOPRING MN 118 A22	2
S45	70217118 K	LIFTRING MN 118 A22	1
S31	70675640	STAGE MN2 137-1640-HD	1
S32	70202137 K	PACKSET MN 137 TANDEM SEAL	1
S33	70207137 K	SLIDER MN 137 A35	1
S34	70216137 K	OUTER STOPRING MN 137 A22	2
S35	70217137 K	LIFTRING MN 137 A22	1
S21	70676640	STAGE MN2 157-1640-HD	1
S22	70202157 K	PACKSET MN 157 TANDEM SEAL	1
S23	70207157 K	SLIDER MN 157 A35	1
S24	70216157 K	OUTER STOPRING MN 157 A22	2
S25	70217157 K	LIFTRING MN 157 A22	1
S11	70677640	STAGE MN2 179-1640-HD	1
S12	70202179 K	PACKSET MN 179 TANDEM SEAL	1
S13	70207179 K	SLIDER MN 179 A35	1
S14	70216179 K	OUTER STOPRING MN 179 A22	1
S15	70217179 K	LIFTRING MN 179 A22	1
B01	70378654R1345	BASE MN2 202-1691-4/4BSAE-190-C273-HD	1
B02	70203202 K	PACKSET MN 202	1
B03	70225365	BOTTOM PLATE MN2 202	1
B04	70270202 K	SEAL BOTTOM PLATE MN 202	1
B05	70220205	LOCKING PLATE MN2 202	3
B06	01732020 K	BOLT HEX M12X25X1.25 SET 6 PCS	1
B07	01732523 K	WASHER SPRING M12 SET 6 PCS	1

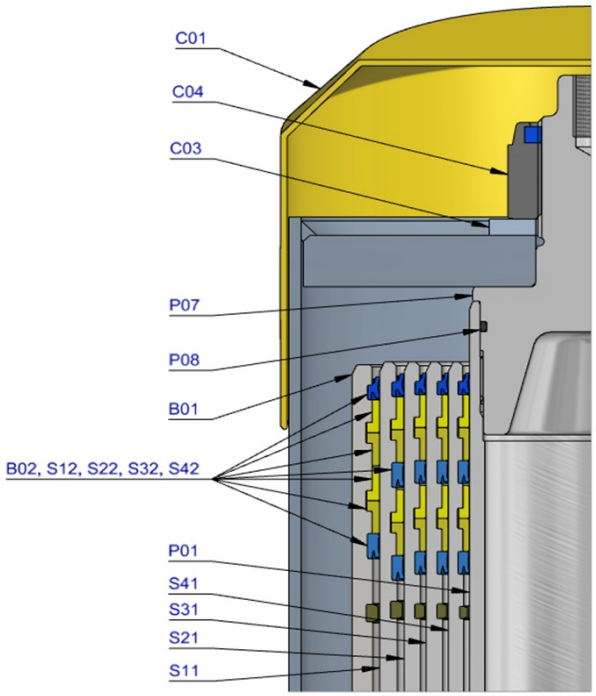

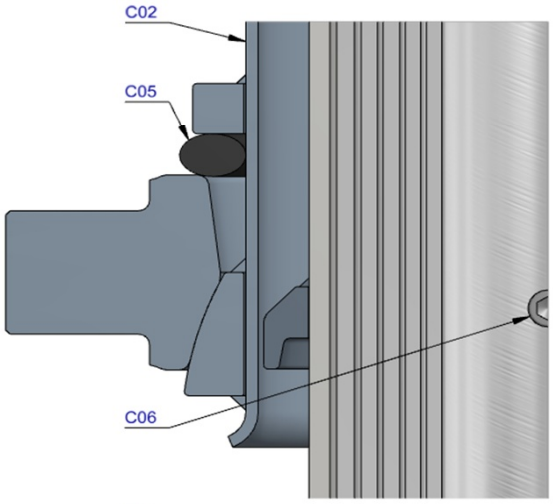

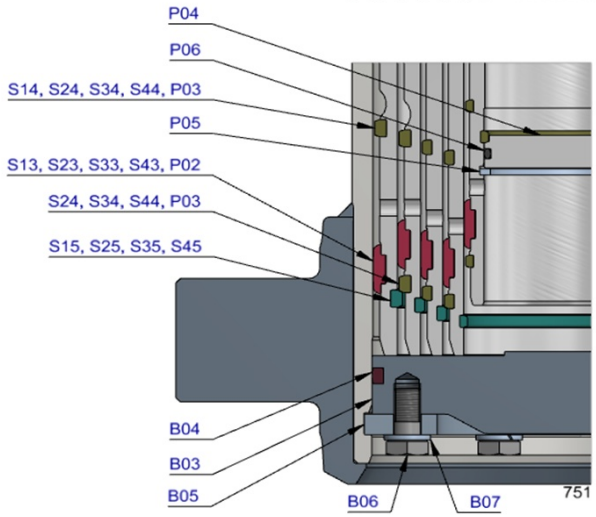

Seal kit complete

	71907751 K	Consists of all packsets with packset grease and O-rings	

Notes

The inner stopring is pre-mounted in the grooves on spare bases and stages.Therefore, when ordering new tubes, it is not required to order inner stoprings separately.

For repair instructions see: CYL-0040. Serial no. is located on type plate and near type plate support.

Subject to change without notice, no rights reserved