Alpha series - Front end cylinder with outer cover

FC A157-5-06750-000-K0343-HD	Item no.	70116550
	Tipping weight	34 - 46 ton

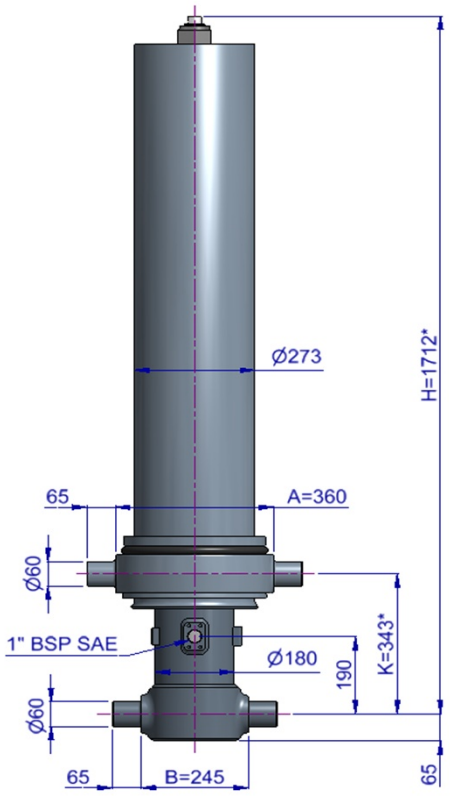

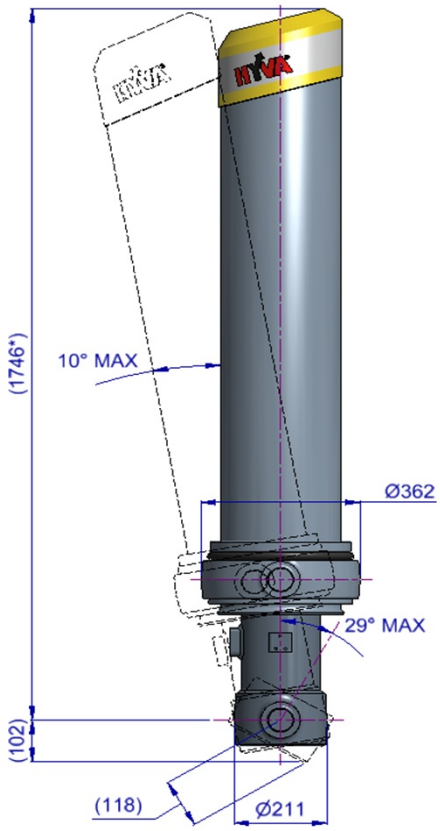

* incl. 20 [-5; +30] mm pull out

3D model is available on request

Specifications

Max. working pressure	250 bar
Weight	335 kg
Working volume	78 L
Total volume	85 L
Max. cyl. load (start tipping)	205 kN

Max. pump flow

With KO[1]	151 L/min
Without KO[1]	106 L/min
With KO[1] below -20°C	106 L/min
Without KO[1] below -20°C	74 L/min

Tipping time

With KO[1]	31 sec
Without KO[1]	44 sec
With KO[1] below -20°C	44 sec
Without KO[1] below -20°C	63 sec
Allowable lowering time	25 sec

Extension	1	2	3	4	5	6	7	Total
Effective diameter [mm]	157	137	118	99	80			
Stroke* [mm]	1325	1350	1355	1360	1360			6750

Technical notes

● This cylinder is a lifting device only. ● It should not be used as a structural member and should not be subjected to side loads. ● Tipping valve must have a pressure relief at the cylinder port set not higher than max. working pressure. ● Verify max. cyl. load. ● Working temperature range is between -40°C and +80°C. ● Max. duration of extension is 0.5 hours (excluded hard chromed stages). ● Cylinder is painted black (RAL9005) with a min. thickness conforming to the 480 hours neutral salt spray test as per ISO 9227. ● [1] Hyva knock-off.

Related documentation

Bracket options: 015BRA10 & 015BRA12

Mounting instructions: CYL-0030

Oil specifications: OIL-0011

Spec sheet explanation: CYL-0041

Tipping weight

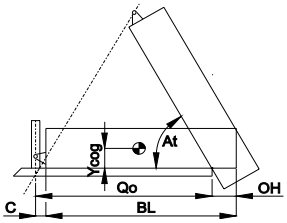

BL	body length
OH	rear overhang
Ycog	vert. pos. centre of gravity
Qo	pivot length
C	bracket length
At	tipping angle
	stroke x 60 / Qo

BL [mm]		9000			8450			7900	
OH [mm]	200	500	800	200	500	800	200	500	800
At [°]	44	46	47	47	49	51	51	53	55
Ycog [mm]									
600	34	37	40	36	39	42	38	42	46
900	36	39	43	38	42	46	41	46	
1200	39	42	46	41	45				

Tipping weight [ton] at maximum pressure of 250 bar for a vertically mounted cylinder and C is 229 mm

For detailed tipping calculations please refer to: https://tipper.hyva.com

Subject to change without notice, no rights reserved

Alpha series - Front end cylinder with outer cover

FC A157-5-06750-000-K0343-HD Item no. 70116550

Pos.	Part no.	Description	Qty.
C01	71839050	DUST COVER FC LOW 15-273	1
C02	71737587	COVER 273-1385 PIN60 A360 SPH LOCK	1
C03	01702956 K	WASHER M48 DIN 125B ZP	1
C04	01702907 K	TOPNUT NYLOC M48x3 DIN 985 ZP	1
C05	01791953	O-RING COVER D.273	1
C06	15014550 K	BOLT HSHC M12X30X1.75 Q8.8 DIN 912 ZP	1
P01	70471581	PISTON MN3 S 080-1585-HD-HC	1
P02	70207080 K	SLIDER MN 080 (2 x 1/2) A35	1
P03	70216080 K	OUTER STOPRING MN 080 A22	2
P04	70230080	BOTTOM PLATE PISTON MN 080 MK2 HD	1
P05	01745030 K	CIRCLIP 67 DIN 472 (71.5x2.5)	1
P06	70260210 K	O-RING PISTON BOTTOM 080	1
P07	70232305	PISTON HEAD 080 MN3 SOLID	1
P08	70260110 K	O-RING 63.09 X 3.53 MM	1
S41	70673580	STAGE MN2 099-1580-HD	1
S42	70202099 K	PACKSET MN 099 TANDEM SEAL	1
S43	70207099 K	SLIDER MN 099 (2 x 1/2) A35	1
S44	70216099 K	OUTER STOPRING MN 099 A22	2
S45	70217099 K	LIFTRING MN 099 A22	1
S31	70674580	STAGE MN2 118-1580-HD	1
S32	70202118 K	PACKSET MN 118 TANDEM SEAL	1
S33	70207118 K	SLIDER MN 118 (2 x 1/2) A35	1
S34	70216118 K	OUTER STOPRING MN 118 A22	2
S35	70217118 K	LIFTRING MN 118 A22	1
S21	70675580	STAGE MN2 137-1580-HD	1
S22	70202137 K	PACKSET MN 137 TANDEM SEAL	1
S23	70207137 K	SLIDER MN 137 A35	1
S24	70216137 K	OUTER STOPRING MN 137 A22	2
S25	70217137 K	LIFTRING MN 137 A22	1
S11	70676580	STAGE MN2 157-1580-HD	1
S12	70202157 K	PACKSET MN 157 TANDEM SEAL	1
S13	70207157 K	SLIDER MN 157 A35	1
S14	70216157 K	OUTER STOPRING MN 157 A22	1
S15	70217157 K	LIFTRING MN 157 A22	1
B01	70377580R1285	BASE MN2 179-1623-4/4BSAE-190-C273-HD	1
B02	70203179 K	PACKSET MN 179	1
B03	70225360	BOTTOM PLATE MN2 179	1
B04	70270179 K	SEAL BOTTOM PLATE MN 179	1
B05	70220185	LOCKING PLATE MN2 179	3
B06	01732055 K	BOLT HEX M8X20X1.25 SET 6 PCS	1
B07	01732559 K	WASHER SPRING M8 SET 6 PCS	1

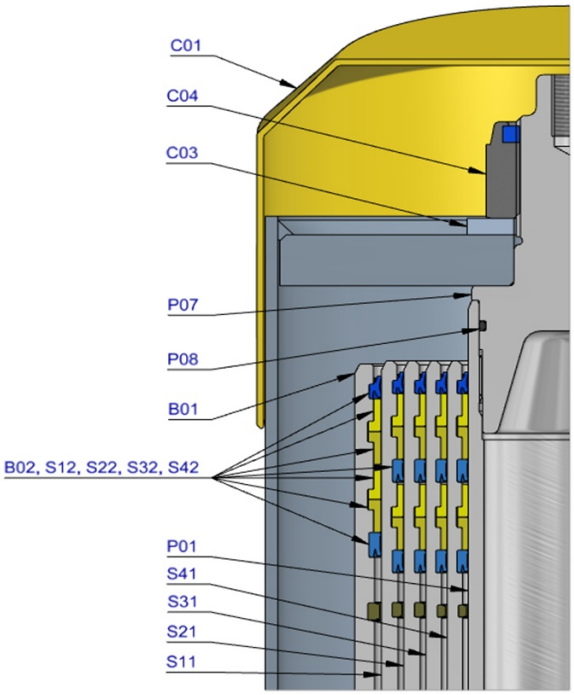

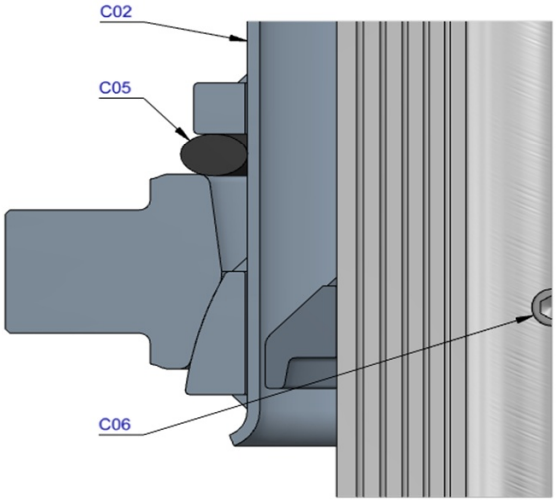

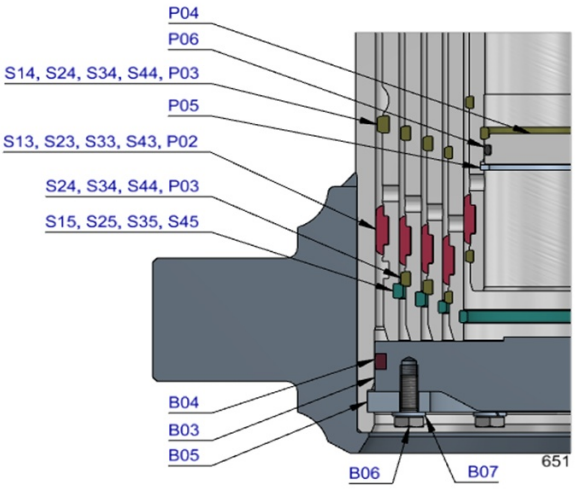

Seal kit complete

	71907651 K	Consists of all packsets with packset grease and O-rings	

Notes

The inner stopring is pre-mounted in the grooves on spare bases and stages. Therefore, when ordering new tubes, it is not required to order inner stoprings separately.

For repair instructions see: CYL-0040. Serial no. is located on type plate and near type plate support.

Subject to change without notice, no rights reserved