Alpha series - Front end cylinder with outer cover

FC A129-3-04235-000-K0343-HD	Item no.	70514250
	Tipping weight	45 - 61 ton

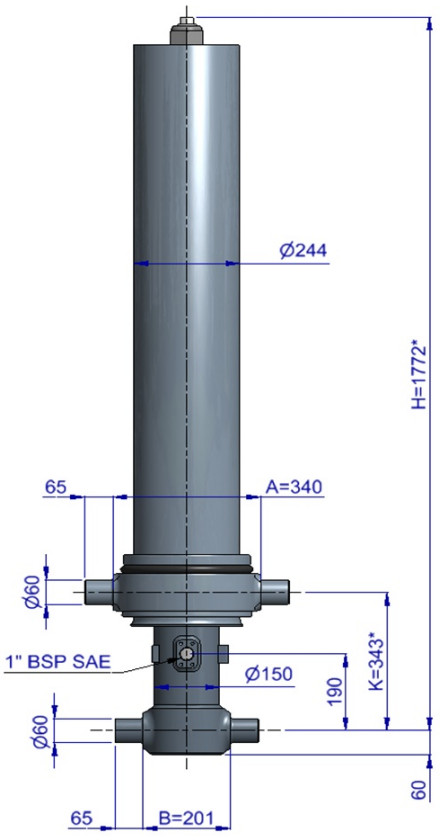

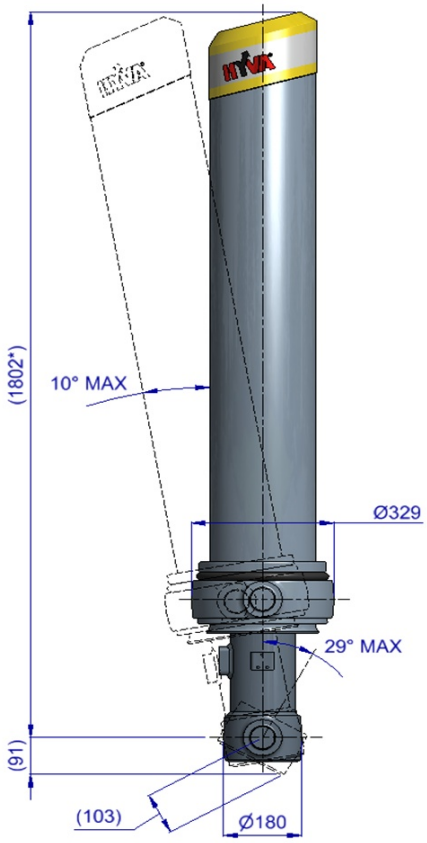

* incl. 20 [-5; +30] mm pull out

3D model is available on request

Specifications

Max. working pressure	250	bar
Weight	240	kg
Working volume	41	L
Total volume	45	L
Max. cyl. load (start tipping)	245	kN

Max. pump flow

With KO[1]	195	L/min
Without KO[1]	137	L/min
With KO[1] below -20°C	137	L/min
Without KO[1] below -20°C	96	L/min

Tipping time

With KO[1]	13	sec
Without KO[1]	18	sec
With KO[1] below -20°C	19	sec
Without KO[1] below -20°C	26	sec
Allowable lowering time	10	sec

Extension	1	2	3	4	5	6	7	Total
Effective diameter [mm]	129	110	91					
Stroke* [mm]	1395	1420	1420					4235

Technical notes

● This cylinder is a lifting device only. ● It should not be used as a structural member and should not be subjected to side loads. ● Tipping valve must have a pressure relief at the cylinder port set not higher than max. working pressure. ● Verify max. cyl. load. ● Working temperature range is between -40°C and +80°C. ● Max. duration of extension is 0.5 hours (excluded hard chromed stages). ● Cylinder is painted black (RAL9005) with a min. thickness conforming to the 480 hours neutral salt spray test as per ISO 9227. ● [1] Hyva knock-off.

Related documentation

Bracket options: 015BRA10 & 015BRA12

Mounting instructions: CYL-0030

Oil specifications: OIL-0011

Spec sheet explanation: CYL-0041

Tipping weight

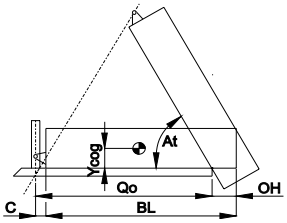

BL	body length
OH	rear overhang
Ycog	vert. pos. centre of gravity
Qo	pivot length
C	bracket length
At	tipping angle
	stroke x 60 / Qo

BL [mm]		5600			5400			5200	
OH [mm]	200	500	800	200	500	800	200	500	800
At [°]	44	47	50	46	49	52	48	51	55
Ycog [mm]									
600	45	51	58	46	52	61	48	54	
900	49	56		51			52		
1200	53								

Tipping weight [ton] at maximum pressure of 250 bar for a vertically mounted cylinder and C is 229 mm

For detailed tipping calculations please refer to: https://tipper.hyva.com

Subject to change without notice, no rights reserved

Alpha series - Front end cylinder with outer cover

FC A129-3-04235-000-K0343-HD Item no. 70514250

Pos.	Part no.	Description	Qty.
C01	71839040	DUST COVER FC LOW 15-244	1
C02	71736632	COVER 242-1445 PIN60 A340 SPH LOCK	1
C03	01702956 K	WASHER M48 DIN 125B ZP	1
C04	01702907 K	TOPNUT NYLOC M48x3 DIN 985 ZP	1
C05	01791941	O-RING COVER D.242	1
C06	15014550 K	BOLT HSHC M12X30X1.75 Q8.8 DIN 912 ZP	1
P01	74412651	PISTON FL2 S 091-1645-HD-HC	1
P02	71807093 K	SLIDER FL 091 (2 X 1/2) A35	1
P03	71851091 K	OUTER STOPRING FL 091 A22	2
P04	71822705	BOTTOM PLATE PISTON FL 091 MK2 HD	1
P05	01745020 K	CIRCLIP 78 DIN 472 (82.5x2.5)	1
P06	71870215 K	O-RING PISTON BOTTOM 091	1
P07	71848200	PISTON HEAD FL 091 MK2	1
P08	01226430 K	O-RING 72.62 X 3.53 MM	1
S21	74613650	STAGE FL2 110-1640-HD	1
S22	71808110 K	PACKSET FL 110/HP 110 TANDEM SEAL	1
S23	71807112 K	SLIDER FL 110 (2 X 1/2) A35	1
S24	71851110 K	OUTER STOPRING FL 110 A22	2
S25	71852110 K	LIFTRING FL 110 A22	1
S11	74614650	STAGE FL2 129-1640-HD	1
S12	71808129 K	PACKSET FL 129/HP 129 TANDEM SEAL	1
S13	71807131 K	SLIDER FL 129 (2 X 1/2) A35	1
S14	71851129 K	OUTER STOPRING FL 129 A22	1
S15	71852129 K	LIFTRING FL 129 A22	1
B01	74515650R1345	BASE FL2 149-1679-4/4BSAE-190-C242-HD	1
B02	71802149 K	PACKSET FL 149/HP 150	1
B03	71825420	BOTTOM PLATE FL2 149	1
B04	71870030 K	SEAL BOTTOM PLATE FL 149	1
B05	71820149	LOCKING PLATE FL 149	3
B06	01732055 K	BOLT HEX M8X20X1.25 SET 6 PCS	1
B07	01732559 K	WASHER SPRING M8 SET 6 PCS	1

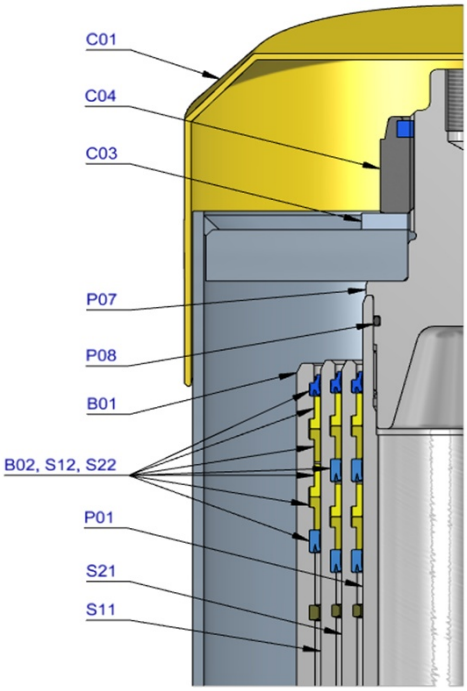

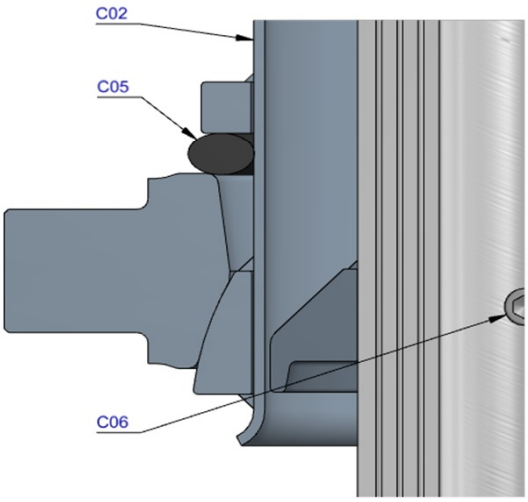

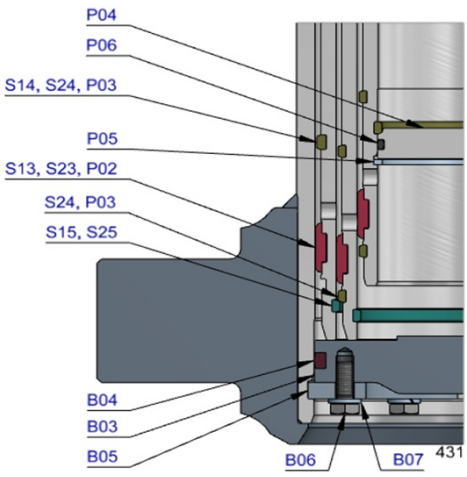

Seal kit complete

	71908431 K	Consists of all packsets with packset grease and O-rings	

Notes

The inner stopring is pre-mounted in the grooves on spare bases and stages.Therefore, when ordering new tubes, it is not required to order inner stoprings separately.

For repair instructions see: CYL-0040. Serial no. is located on type plate and near type plate support.

Subject to change without notice, no rights reserved