Alpha series - Front end cylinder with outer cover

FC A118-3-03635-000-K0343-HD	Item no.	70114200
	Tipping weight	34 - 58 ton

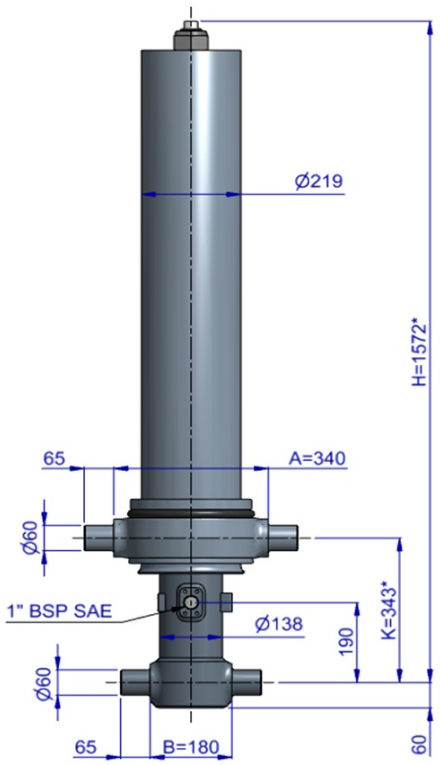

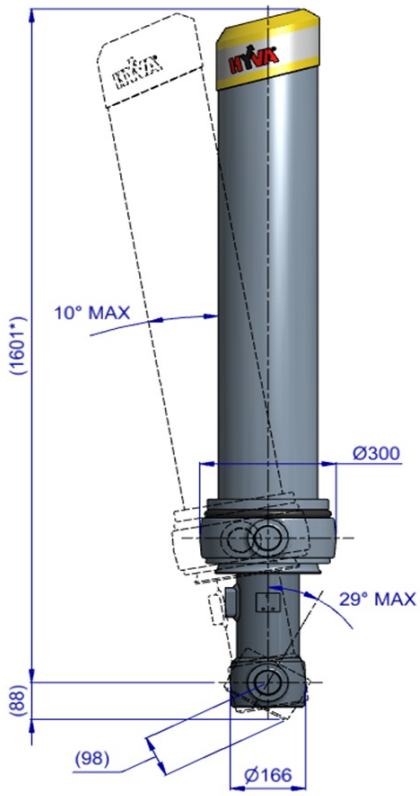

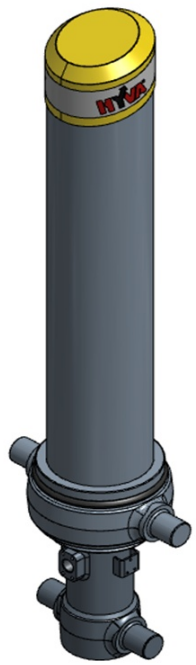

* incl. 20 [-5; +30] mm pull out

3D model is available on request

Specifications

Max. working pressure	250 bar
Weight	192 kg
Working volume	29 L
Total volume	32 L
Max. cyl. load (start tipping)	245 kN

Max. pump flow

With KO[1]	151 L/min
Without KO[1]	106 L/min
With KO[1] below -20°C	106 L/min
Without KO[1] below -20°C	74 L/min

Tipping time

With KO[1]	12 sec
Without KO[1]	16 sec
With KO[1] below -20°C	17 sec
Without KO[1] below -20°C	23 sec
Allowable lowering time	9 sec

Extension	1	2	3	4	5	6	7	Total
Effective diameter [mm]	118	99	80					
Stroke* [mm]	1195	1220	1220					3635

Technical notes

● This cylinder is a lifting device only. ● It should not be used as a structural member and should not be subjected to side loads. ● Tipping valve must have a pressure relief at the cylinder port set not higher than max. working pressure. ● Verify max. cyl. load. ● Working temperature range is between -40°C and +80°C. ● Max. duration of extension is 0.5 hours (excluded hard chromed stages). ● Cylinder is painted black (RAL9005) with a min. thickness conforming to the 480 hours neutral salt spray test as per ISO 9227. ● [1] Hyva knock-off.

Related documentation

Bracket options: 015BRA10 & 015BRA12

Mounting instructions: CYL-0030

Oil specifications: OIL-0011

Spec sheet explanation: CYL-0041

Tipping weight

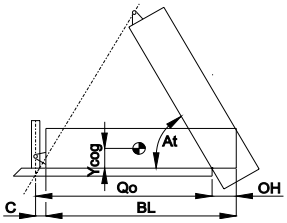

BL	body length
OH	rear overhang
Ycog	vert. pos. centre of gravity
Qo	pivot length
C	bracket length
At	tipping angle
	stroke x 60 / Qo

BL [mm]		4900			4650			4400	
OH [mm]	200	400	600	200	400	600	200	400	600
At [°]	44	46	48	47	49	51	49	52	55
Ycog [mm]									
400	34	36	40	35	38	42	36	40	45
700	37	40	45	38	43	49	40	46	54
1000	40	45	52	43	49	58	46	54	

Tipping weight [ton] at maximum pressure of 250 bar for a vertically mounted cylinder and C is 178 mm

For detailed tipping calculations please refer to: https://tipper.hyva.com

Subject to change without notice, no rights reserved

Alpha series - Front end cylinder with outer cover

FC A118-3-03635-000-K0343-HD Item no. 70114200

Pos.	Part no.	Description	Qty.
C01	71839020	DUST COVER FC LOW 15-219	1
C02	71735484	COVER 219-1245 PIN60 A340 SPH LOCK	1
C03	01702956 K	WASHER M48 DIN 125B ZP	1
C04	01702907 K	TOPNUT NYLOC M48x3 DIN 985 ZP	1
C05	01791930	O-RING COVER D.219	1
C06	15014550 K	BOLT HSHC M12X30X1.75 Q8.8 DIN 912 ZP	1
P01	70471441	PISTON MN3 S 080-1445-HD-HC	1
P02	70207080 K	SLIDER MN 080 (2 x 1/2) A35	1
P03	70216080 K	OUTER STOPRING MN 080 A22	2
P04	70230080	BOTTOM PLATE PISTON MN 080 MK2 HD	1
P05	01745030 K	CIRCLIP 67 DIN 472 (71.5x2.5)	1
P06	70260210 K	O-RING PISTON BOTTOM 080	1
P07	70232305	PISTON HEAD 080 MN3 SOLID	1
P08	70260110 K	O-RING 63.09 X 3.53 MM	1

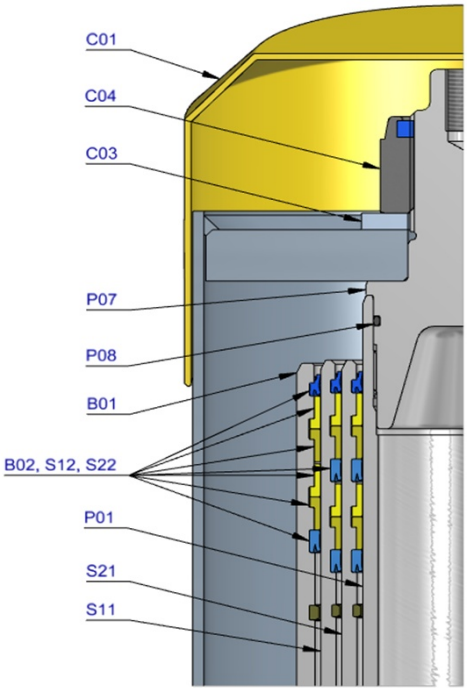

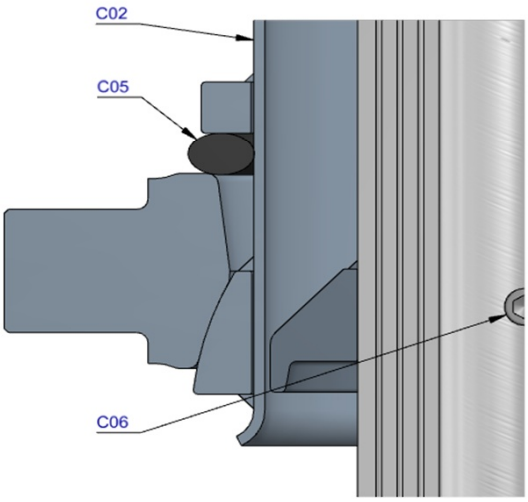

S21	70673440	STAGE MN2 099-1440-HD	1
S22	70202099 K	PACKSET MN 099 TANDEM SEAL	1
S23	70207099 K	SLIDER MN 099 (2 x 1/2) A35	1
S24	70216099 K	OUTER STOPRING MN 099 A22	2
S25	70217099 K	LIFTRING MN 099 A22	1
S11	70674440	STAGE MN2 118-1440-HD	1
S12	70202118 K	PACKSET MN 118 TANDEM SEAL	1
S13	70207118 K	SLIDER MN 118 (2 x 1/2) A35	1
S14	70216118 K	OUTER STOPRING MN 118 A22	1
S15	70217118 K	LIFTRING MN 118 A22	1
B01	70375440R1145	BASE MN2 137-1479-4/4BSAE-190-C219-HD	1
B02	70203137 K	PACKSET MN 137	1
B03	70225350	BOTTOM PLATE MN2 137	1
B04	70270137 K	SEAL BOTTOM PLATE MN 137	1
B05	70220137	LOCKING PLATE MN 137	3
B06	01732055 K	BOLT HEX M8X20X1.25 SET 6 PCS	1
B07	01732559 K	WASHER SPRING M8 SET 6 PCS	1

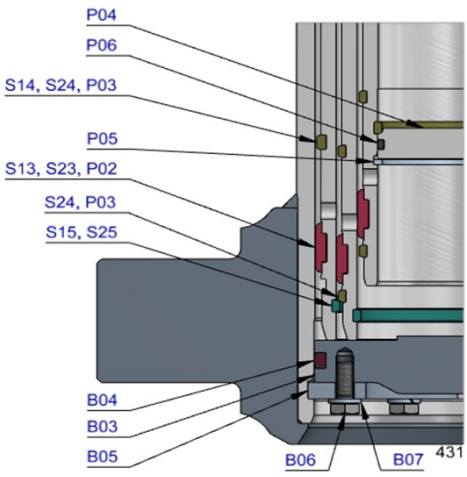

Seal kit complete

	71907431 K	Consists of all packsets with packset grease and O-rings	

Notes

The inner stopring is pre-mounted in the grooves on spare bases and stages. Therefore, when ordering new tubes, it is not required to order inner stoprings separately.

For repair instructions see: CYL-0040. Serial no. is located on type plate and near type plate support.

Subject to change without notice, no rights reserved