Alpha series - Front end cylinder with outer cover

FC A149-4-05460-004-K1050	Item no.	70525428
	Tipping weight	45 - 60 ton

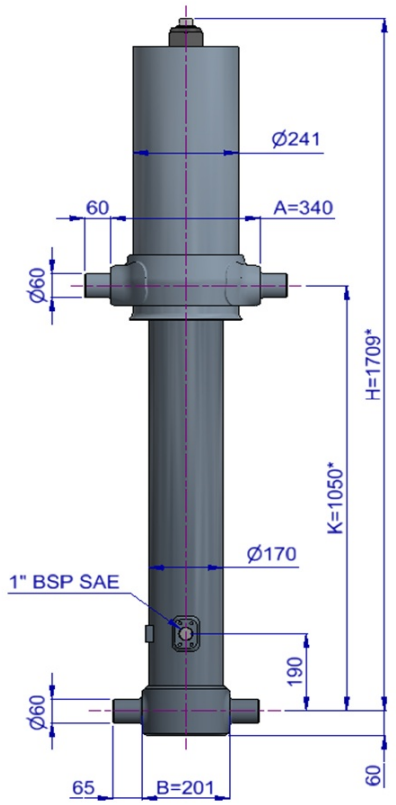

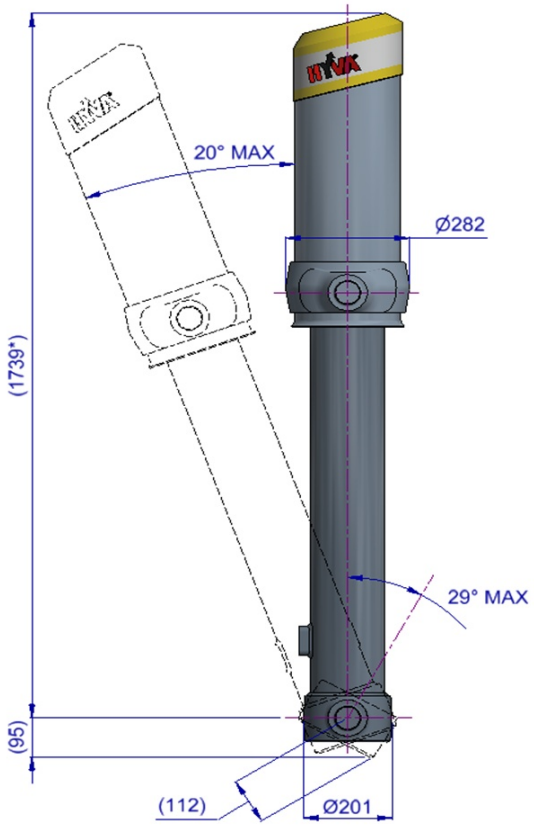

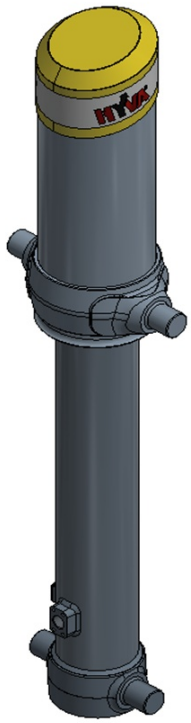

* incl. 20 [-5; +30] mm pull out

3D model is available on request

Specifications

Max. working pressure	250	bar
Weight	243	kg
Working volume	63	L
Total volume	69	L
Max. cyl. load (start tipping)	245	kN
Max. cyl. load (end of stroke)[2]	129	kN
Max. cyl. load (end of stroke)[3]	150	kN

Max. pump flow

With KO[1]	190	L/min
Without KO[1]	137	L/min
With KO[1] below -20°C	133	L/min
Without KO[1] below -20°C	96	L/min

Tipping time

With KO[1]	20	sec
Without KO[1]	28	sec
With KO[1] below -20°C	29	sec
Without KO[1] below -20°C	40	sec
Allowable lowering time	20	sec

Extension	1	2	3	4	5	6	7	Total
Effective diameter [mm]	149	129	110	91				
Stroke* [mm]	1350	1370	1370	1370				5460

Technical notes

● This cylinder is a lifting device only. ● It should not be used as a structural member and should not be subjected to side loads. ● Tipping valve must have a pressure relief at the cylinder port set not higher than max. working pressure. ● Verify max. cyl. load. ● Working temperature range is between -40°C and +80°C. ● Max. duration of extension is 0.5 hours (excluded hard chromed stages). ● Cylinder is painted black (RAL9005) with a min. thickness conforming to the 480 hours neutral salt spray test as per ISO 9227. ● [1] Hyva knock-off. ● [2] Unsubstantial unloading (sticky load). ● [3] Substantial unloading.

Related documentation

Bracket options: 015BRA10 & 015BRA12

Mounting instructions: CYL-0030

Oil specifications: OIL-0011

Spec sheet explanation: CYL-0041

Tipping weight

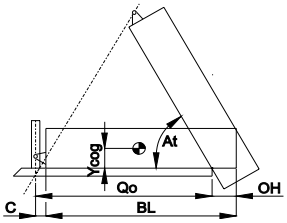

BL	body length
OH	rear overhang
Ycog	vert. pos. centre of gravity
Qo	pivot length
C	bracket length
At	tipping angle
	stroke x 60 / Qo

BL [mm]		7200			6900			6600	
OH [mm]	200	500	800	200	500	800	200	500	800
At [°]	45	47	49	47	49	52	49	52	55
Ycog [mm]									
600	45	49	54	46	50	56	48	53	60
900	48	53		50	55		52		
1200	51								

Tipping weight [ton] at maximum pressure of 250 bar for a vertically mounted cylinder and C is 229 mm

For detailed tipping calculations please refer to: https://tipper.hyva.com

Subject to change without notice, no rights reserved

Alpha series - Front end cylinder with outer cover

FC A149-4-05460-004-K1050 Item no. 70525428

Pos.	Part no.	Description	Qty.
C01	71839030	DUST COVER FC LOW 15-241	1
C02	71709257	COVER 241-0675 PIN60 A340 FIX	1
C03	01702956 K	WASHER M48 DIN 125B ZP	1
C04	01702907 K	TOPNUT NYLOC M48x3 DIN 985 ZP	1
P01	74402581	PISTON FL2 S 091-1585-HC	1
P02	71853091 K	SLIDER FL 091 (2 X 1/2) A22	1
P03	71851091 K	OUTER STOPRING FL 091 A22	1
P04	71822091	BOTTOM PLATE PISTON FL 091	1
P05	01745012 K	CIRCLIP 82 DIN 472 (87.5x2.5)	1
P06	71870215 K	O-RING PISTON BOTTOM 091	1
P07	71848200	PISTON HEAD FL 091 MK2	1
P08	01226430 K	O-RING 72.62 X 3.53 MM	1
S31	74603580	STAGE FL2 110-1580	1
S32	71802110 K	PACKSET FL 110	1
S33	71853110 K	SLIDER FL 110 (2 X 1/2) A22	1
S34	71851110 K	OUTER STOPRING FL 110 A22	1
S35	71852110 K	LIFTRING FL 110 A22	1
S21	74604580	STAGE FL2 129-1580	1
S22	71802129 K	PACKSET FL 129/HP 129	1
S23	71853129 K	SLIDER FL 129 (2 X 1/2) A22	1
S24	71851129 K	OUTER STOPRING FL 129 A22	1
S25	71852129 K	LIFTRING FL 129 A22	1
S11	74605580	STAGE FL2 149-1580	1
S12	71802149 K	PACKSET FL 149/HP 150	1
S13	71807151 K	SLIDER FL 149 A35	1
S14	71851149 K	OUTER STOPRING FL 149 A22	1
S15	71852149 K	LIFTRING FL 149 A22	1
B01	74506580R0575	BASE FL2 169-1619-4/4BSAE-190-C242	1
B02	71802169 K	PACKSET FL 169	1
B03	71825425	BOTTOM PLATE FL2 169	1
B04	71870035 K	SEAL BOTTOM PLATE FL 169	1
B05	71820169	LOCKING PLATE FL 169	3
B06	01732055 K	BOLT HEX M8X20X1.25 SET 6 PCS	1
B07	01732559 K	WASHER SPRING M8 SET 6 PCS	1

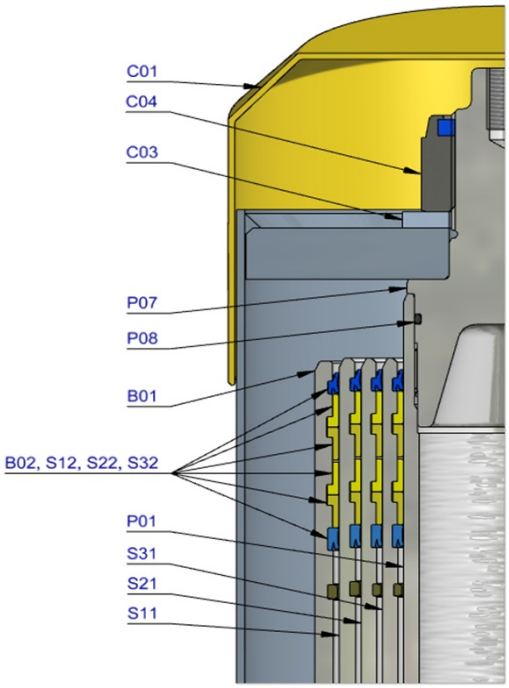

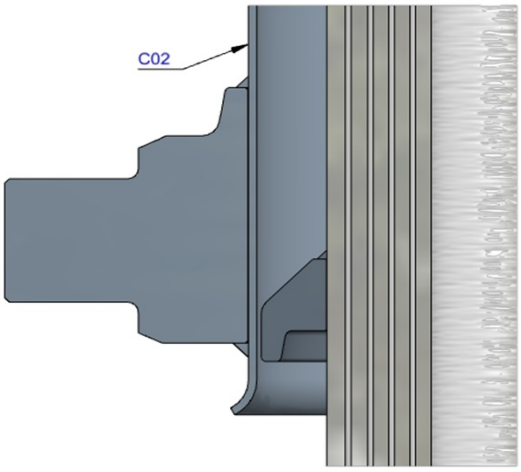

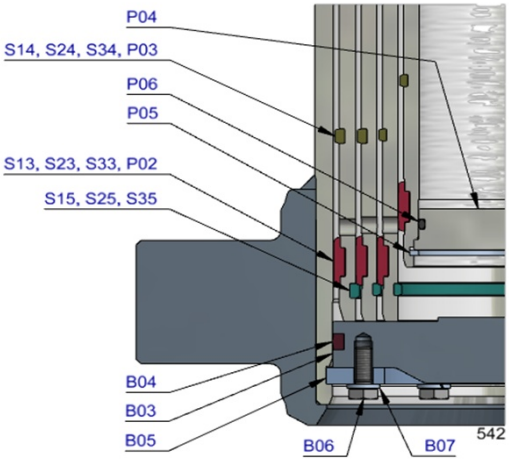

Seal kit complete

	71908540 K	Consists of all packsets with packset grease and O-rings	

Notes

The inner stopring is pre-mounted in the grooves on spare bases and stages.Therefore, when ordering new tubes, it is not required to order inner stoprings separately.

For repair instructions see: CYL-0040. Serial no. is located on type plate and near type plate support.

Subject to change without notice, no rights reserved