Alpha series - Front end cylinder with outer cover

FC A157-5-05405-014-K1050	Item no.	70126414
	Tipping weight	36 - 50 ton

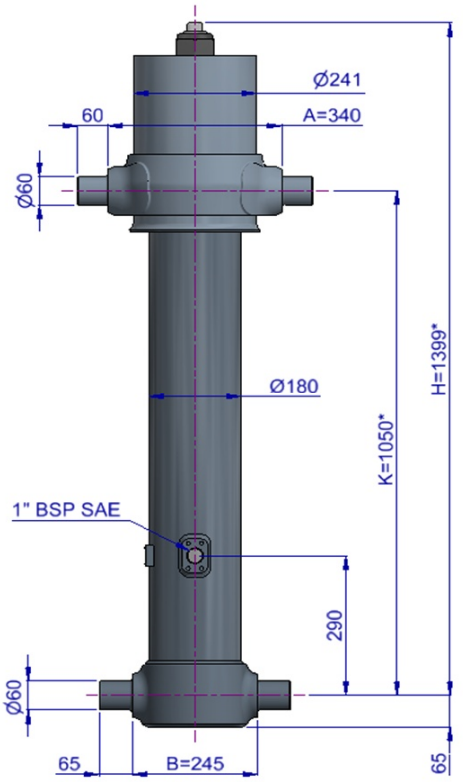

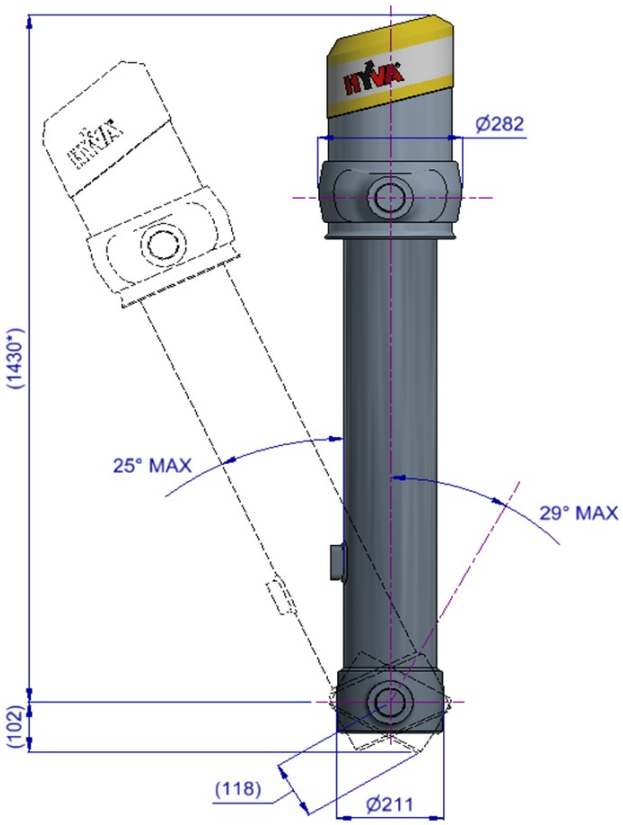

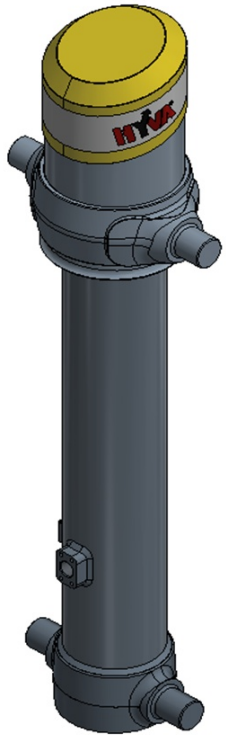

* incl. 20 [-5; +30] mm pull out

3D model is available on request

Specifications

Max. working pressure	250	bar
Weight	230	kg
Working volume	62	L
Total volume	68	L
Max. cyl. load (start tipping)	205	kN
Max. cyl. load (end of stroke)[2]	111	kN
Max. cyl. load (end of stroke)[3]	130	kN

Max. pump flow

With KO[1]	151	L/min
Without KO[1]	106	L/min
With KO[1] below -20°C	106	L/min
Without KO[1] below -20°C	74	L/min

Tipping time

With KO[1]	25	sec
Without KO[1]	35	sec
With KO[1] below -20°C	36	sec
Without KO[1] below -20°C	50	sec
Allowable lowering time	25	sec

Extension	1	2	3	4	5	6	7	Total
Effective diameter [mm]	157	137	118	99	80			
Stroke* [mm]	1065	1085	1085	1085	1085			5405

Technical notes

● This cylinder is a lifting device only. ● It should not be used as a structural member and should not be subjected to side loads. ● Tipping valve must have a pressure relief at the cylinder port set not higher than max. working pressure. ● Verify max. cyl. load. ● Working temperature range is between -40°C and +80°C. ● Max. duration of extension is 0.5 hours (excluded hard chromed stages). ● Cylinder is painted black (RAL9005) with a min. thickness conforming to the 480 hours neutral salt spray test as per ISO 9227. ● [1] Hyva knock-off. ● [2] Unsubstantial unloading (sticky load). ● [3] Substantial unloading.

Related documentation

Bracket options: 015BRA10 & 015BRA12

Mounting instructions: CYL-0030

Oil specifications: OIL-0011

Spec sheet explanation: CYL-0041

Tipping weight

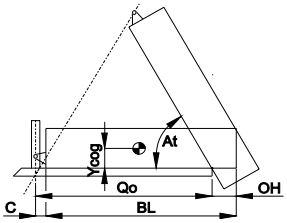

BL	body length
OH	rear overhang
Ycog	vert. pos. centre of gravity
Qo	pivot length
C	bracket length
At	tipping angle
	stroke x 60 / Qo

BL [mm]		7100			6800			6500	
OH [mm]	200	500	800	200	500	800	200	500	800
At [°]	45	47	50	47	50	52	50	52	55
Ycog [mm]									
600	36	39	44	37	41	46	39	43	50
900	39	43	49	40	46		43		
1200	42			45					

Tipping weight [ton] at maximum pressure of 250 bar for a vertically mounted cylinder and C is 229 mm

For detailed tipping calculations please refer to: https://tipper.hyva.com

Subject to change without notice, no rights reserved

Alpha series - Front end cylinder with outer cover

FC A157-5-05405-014-K1050 Item no. 70126414

Pos.	Part no.	Description	Qty.
C01	71839030	DUST COVER FC LOW 15-241	1
C02	71709074	COVER 241-0365 PIN60 A340 FIX	1
C03	01702956 K	WASHER M48 DIN 125B ZP	1
C04	01702907 K	TOPNUT NYLOC M48x3 DIN 985 ZP	1
P01	70461301	PISTON MN3 S 080-1280-HC	1
P02	70209300 K	SLIDER MN 080 (2 x 1/2) A22	1
P03	70216080 K	OUTER STOPRING MN 080 A22	1
P04	70224080	BOTTOM PLATE PISTON MN 080	1
P05	01745035 K	CIRCLIP 70 DIN 472 (74.5x2.5)	1
P06	70260210 K	O-RING PISTON BOTTOM 080	1
P07	70232305	PISTON HEAD 080 MN3	1
P08	70260110 K	O-RING 63.09 X 3.53 MM	1
S41	70663300	STAGE MN2 099-1275	1
S42	70203099 K	PACKSET MN 099	1
S43	70209310 K	SLIDER MN 099 (2 x 1/2) A22	1
S44	70216099 K	OUTER STOPRING MN 099 A22	1
S45	70217099 K	LIFTRING MN 099 A22	1
S31	70664300	STAGE MN2 118-1275	1
S32	70203118 K	PACKSET MN 118	1
S33	70209320 K	SLIDER MN 118 (2 x 1/2) A22	1
S34	70216118 K	OUTER STOPRING MN 118 A22	1
S35	70217118 K	LIFTRING MN 118 A22	1
S21	70665300	STAGE MN2 137-1275	1
S22	70203137 K	PACKSET MN 137	1
S23	70207137 K	SLIDER MN 137 A35	1
S24	70216137 K	OUTER STOPRING MN 137 A22	1
S25	70217137 K	LIFTRING MN 137 A22	1
S11	70666300	STAGE MN2 157-1275	1
S12	70203157 K	PACKSET MN 157	1
S13	70207157 K	SLIDER MN 157 A35	1
S14	70216157 K	OUTER STOPRING MN 157 A22	1
S15	70213157 K	LIFTRING MN 157x5 MK2	1
B01	70367304	BASE MN2 179-1318-4/4BSAE-290	1
B02	70203179 K	PACKSET MN 179	1
B03	70225360	BOTTOM PLATE MN2 179	1
B04	70270179 K	SEAL BOTTOM PLATE MN 179	1
B05	70220185	LOCKING PLATE MN2 179	3
B06	01732055 K	BOLT HEX M8X20X1.25 SET 6 PCS	1
B07	01732559 K	WASHER SPRING M8 SET 6 PCS	1

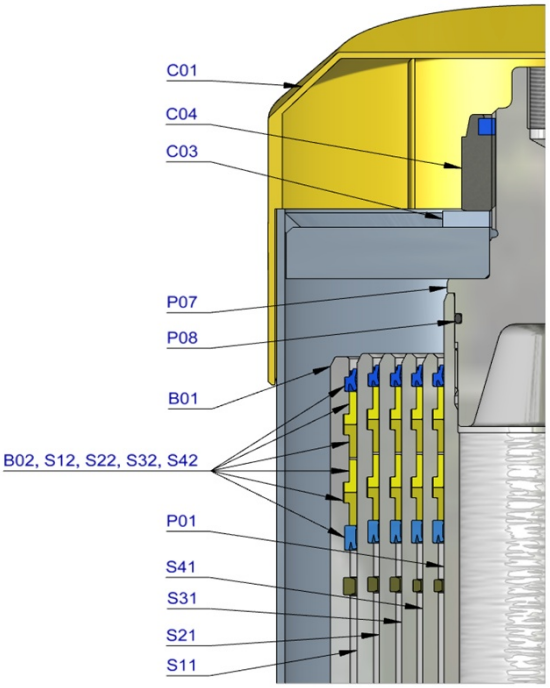

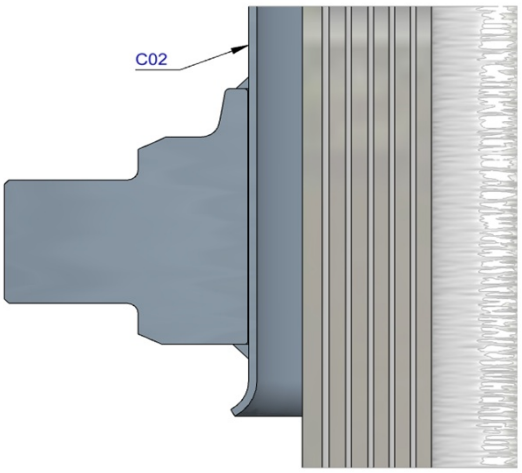

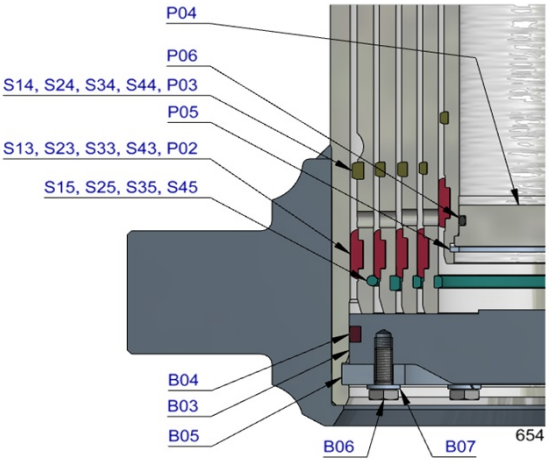

Seal kit complete

	71907650 K	Consists of all packsets with packset grease and O-rings	

Notes

The inner stopring is pre-mounted in the grooves on spare bases and stages. Therefore, when ordering new tubes, it is not required to order inner stoprings separately.

For repair instructions see: CYL-0040. Serial no. is located on type plate and near type plate support.

Subject to change without notice, no rights reserved