# END-OF-STROKE VALVE

End-of-stroke valve, Normally opened

| | | |
|---|---|---|
| Hyva | type : | end-of-stroke valve - ¾" |
| | part number : | 147 20 211 |
| page # 1 / 1 | | normally opened |

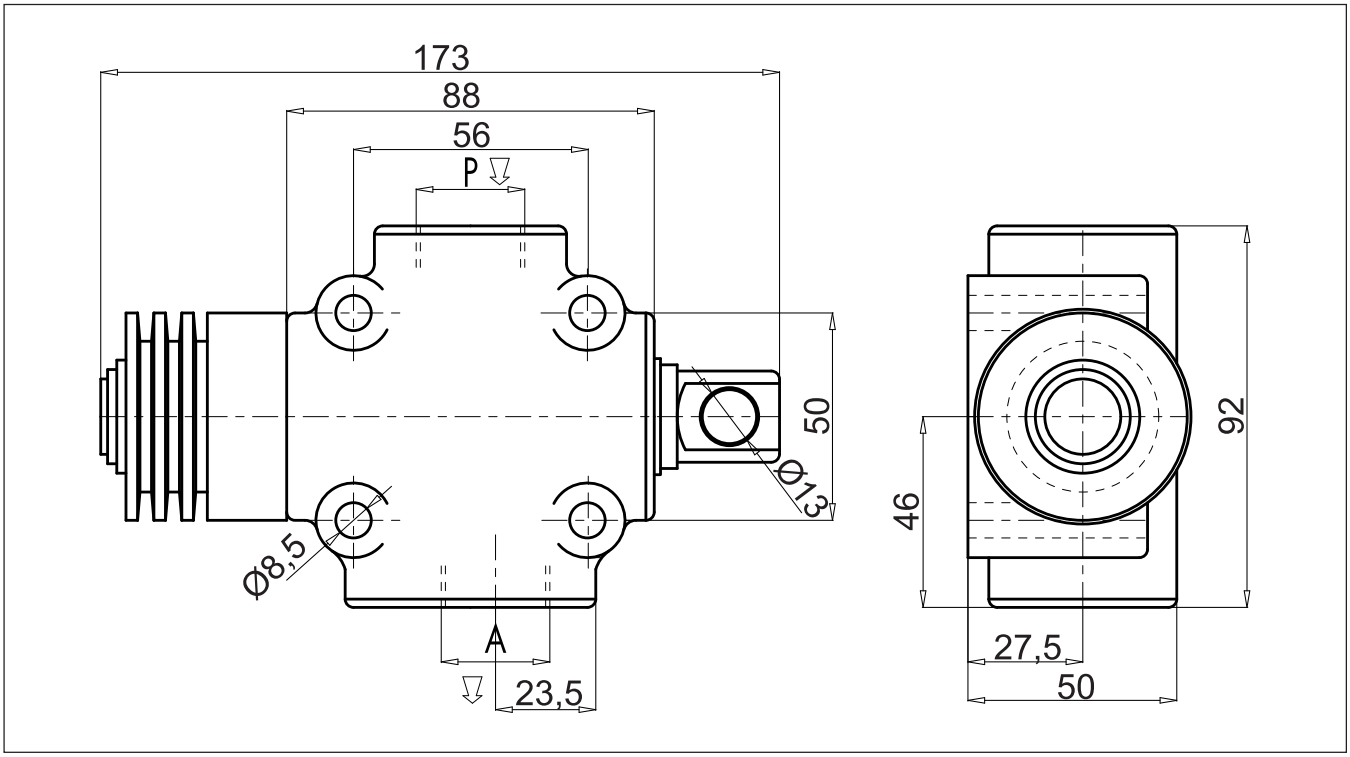


## hydraulic symbol

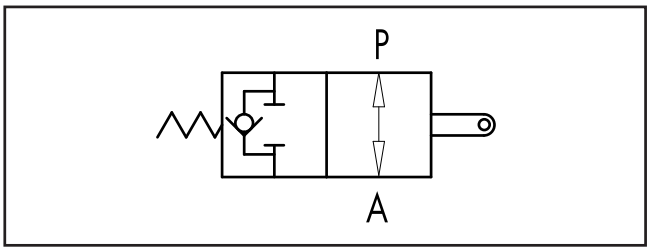


## pressure drops curve

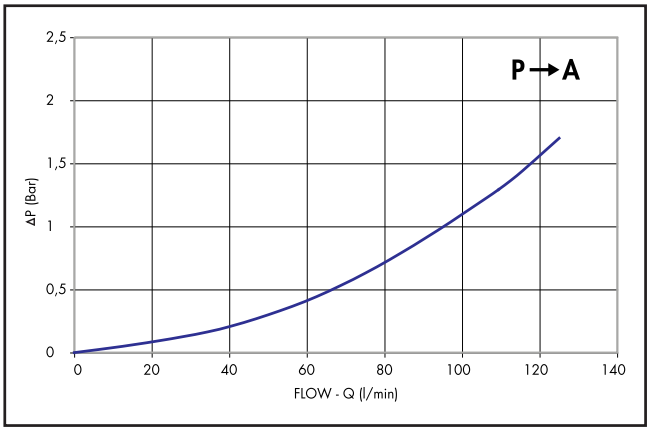

## specifications

| | |
|---|---|
| Ports | : ¾" |
| Weight | : 2,112 kg |
| Max flow | : 120 Lt./min. |
| Max pressure | : 350 Bar |
| Start closing | : 9 mm |
| Power at start position | : 33 kg |
| Max. stroke | : 15,5 mm |
| Power at max. stroke | : 50 kg |
| Oil temperature | : 50°C |
| Oil viscosity | : 30 cSt |