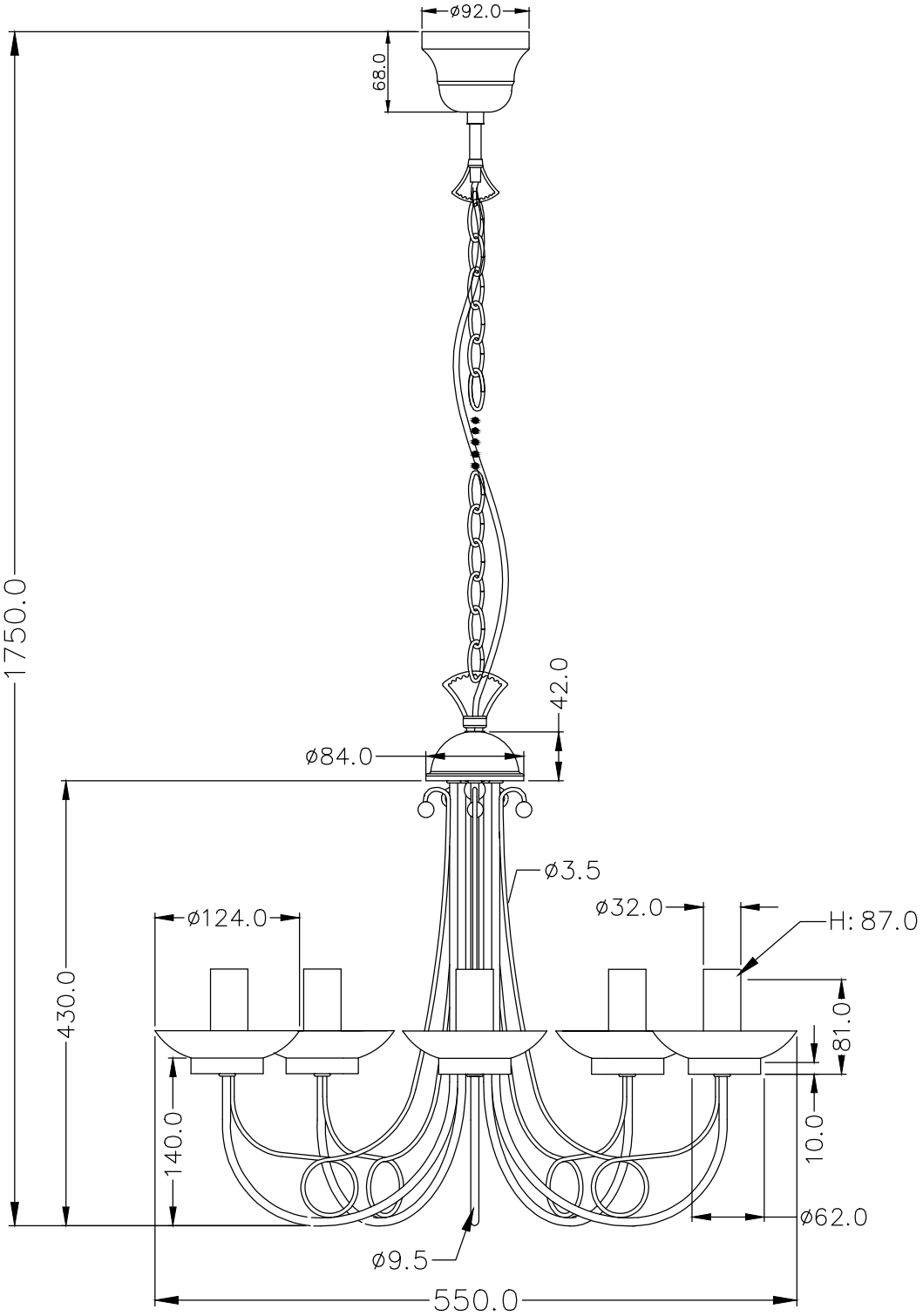
ø92.0
68.0
1750.0
42.0
ø84.0
ø3.5
ø124.0
ø32.0
H: 87.0
430.0
81.0
140.0
10.0
ø62.0
ø9.5
550.0

1199051–XX