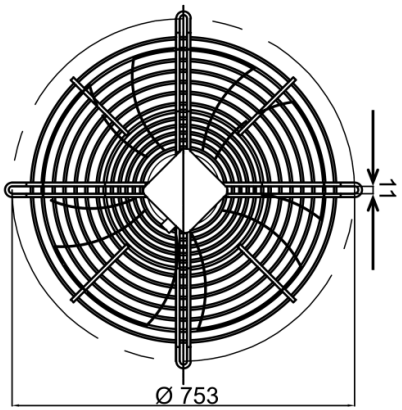


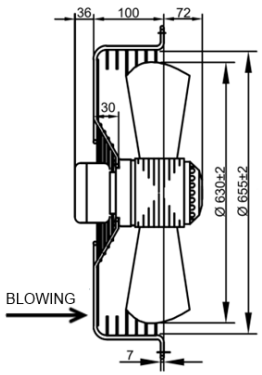


## TECHNICAL SPECIFICATION:

1. All parts of fan should be properly assembled, no oil or dirt on the surface, no obvious distortion, mechanical damage and other defects.
2. Fan rotation is flexible, no delay no operation sound, no scratch and other undesirable phenomena.
3. The safety requirement of fan is performed according to GB12350-2009, the electrical strength is 1500V●min, and the insulation resistance is not less than 100M Ω at room temperature.
4. Motor insulation class, F CLASS.
5. Motor protection level, IP44, fan protection level, IP2X.
6. The fan balance level is: 1400± 10% r/min high G6. 3, vibration value is less than 5.4mm/s.
7. MAER box.
8. Built-in heat protector.

| | | |
|---|---|---|
| MaEr Fan Motor | Product model | **YDWF102L70P4-753N-630B** |
| | Product type | External rotor axial flow fan |
| | Customer | 乌克兰 (Ukraine) |
| | Product number | MAER – 1506075 |
| | Certification | CE, CCC |

## Condition of use:

1) Voltage and frequency: 1 ~ 220V + 5% (50 Hz)
2) Qualification requirements: Terminal block, the recommended standard of lead wire is not less than 0,75mm².
3) Installation position: vertical or upward.
4) Ambient temperature: -40 ~ 80ºC.

Test data at free:

| Connection | UAC (V)±5% | f (Hz) | P1 (W)±10% | I (A)±10% | n (r/min)±10% | Noise db(A) |
|---|---|---|---|---|---|---|
| | 1 ~220V | 50 | 790 | 3.6 | 1400 | 76 |
| | | | | | | |

THE EXTERNAL WIRING DIAGRAM:

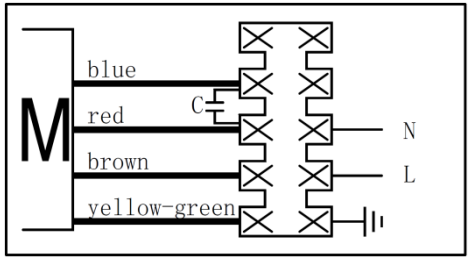


**WIRING DIAGRAM**

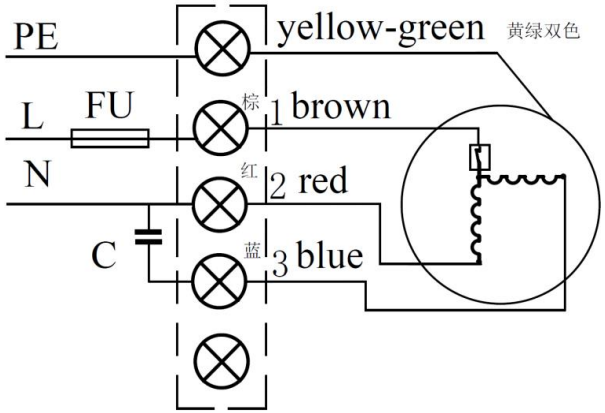


| Performance parameters at key point: | | | | | | |
|---|---|---|---|---|---|---|
| | psf | I | P1 | n | Q | Note |
| | (pa) | (A) | (W) | (r/min) | (m³/h) | |
| ① | 0 | 3.18 | 703 | 1398 | 11224 | |
| ② | 73 | 3.73 | 824 | 1370 | 9836 | |
| ③ | 120 | 4.03 | 892 | 1349 | 8506 | MAX EFF. |
| ④ | 156 | 4.39 | 969 | 1320 | 7082 | |

PS: Fan working performance tested with MAER wall plate, and under standard atmospheric pressure at 20ºC

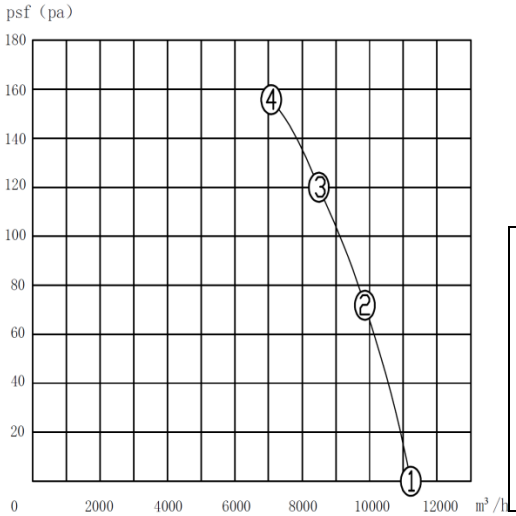


MARK

MAER AXIAL FAN MOTOR
MOTORS & FANS

MODEL: **YDWF102L70P4-753N-630 BLOWING 4E-630-B**

VOLTAGE: 220V / 50Hz

N.W/G.W. 16.3/18.9 kg

MEAS: 67.5x67.5x24 cm

CL. F WITH TERMINAL BOX

20180509X

Nameplate:

MaEr Fan Motor

YDWF102L70P4-753N-630 B 1~220V50Hz 20μF / 450V

892W 4.03A 1349r/min @ 120Pa

CL. F IP54 2018/05

Tel:+380678807231, +380500679006

web:www.iceteco.com

e-mail: iceteko@gmail.com

АЙСТЕКО
РЕШЕНИЕ ХОЛОДА
WWW.ICETECO.COM

| | | The signature | (date)(month)(year) | ZHEJIANG MAER FAN MOTOR CO., LTD. |
|---|---|---|---|---|
| state | Deliver before | | | Product Specification |
| | After the confirmation | | | |
| drawing | | | | |
| audit | | | | |
| approval | | | | |