S4E400-AP02-03

AC axial fan

sickled blades (S series)

with guard grille for short nozzle

ebm-papst Mulfingen GmbH & Co. KG
Bachmühle 2 · D-74673 Mulfingen

ErP2015 EXCEEDS THE NORM

Nominal data

Type	**S4E400-AP02-03**
Motor	**M4E074-EI**

Phase		1~	1~
Nominal voltage	VAC	230	230
Frequency	Hz	50	60
Type of data definition		fa	fa
Valid for approval / standard		CE	CE
Speed	min^{-1}	1430	1700
Power input	W	160	240
Current draw	A	0.73	1.06
Motor capacitor	µF	6	6
Capacitor voltage	VDB	400	400
Max. back pressure	Pa	150	75
Max. ambient temperature	°C	40	40

ml = max. load · me = max. efficiency · fa = running at free air · cs = customer specs · cu = customer unit
Subject to alterations

Data according to ErP directive

Installation category	A
Efficiency category	Static
Variable speed drive integrated	No
Specific ratio*	1,00

* Specific ratio = 1 + p_{fs} / 100 000 Pa

		Actual	Request 2013	Request 2015
Overall efficiency η_{es}		31,9	25,3	29,3
Efficiency grade N		42,6	36	40
Power input P_e	kW	0,2		
Air flow q_v	m³/h	2675		
Pressure increase p_{fs}	Pa	90		
Speed n	min^{-1}	1390		

Data established at point of optimum efficiency

ebmpapst

AC axial fan

sickled blades (S series)

with guard grille for short nozzle

Technical features

Mass	5.9 kg
Size	400 mm
Surface of rotor	Coated in black
Material of blades	Sheet steel, coated in black
Number of blades	5
Direction of air flow	"V"
Direction of rotation	Counter-clockwise, seen on rotor
Type of protection	IP 44; Depending on installation and position as per EN 60034-5
Insulation class	"B"
Humidity class	F1-2
Max. permissible ambient motor temp. (transp./ storage)	+ 80 °C
Min. permissible ambient motor temp. (transp./storage)	- 40 °C
Mounting position	Shaft horizontal or rotor on bottom; rotor on top on request
Condensate discharge holes	Rotor-side
Operation mode	S1
Motor bearing	Ball bearing
Leakage current	< 0.75 mA
Motor protection	Thermal overload protector (TOP) wired internally
Cable exit	Variable
Protection class	I (if protective earth is connected by customer)
Product conforming to standard	EN 60335-1; CE

ebmpapst

AC axial fan

sickled blades (S series)

with guard grille for short nozzle

Product drawing

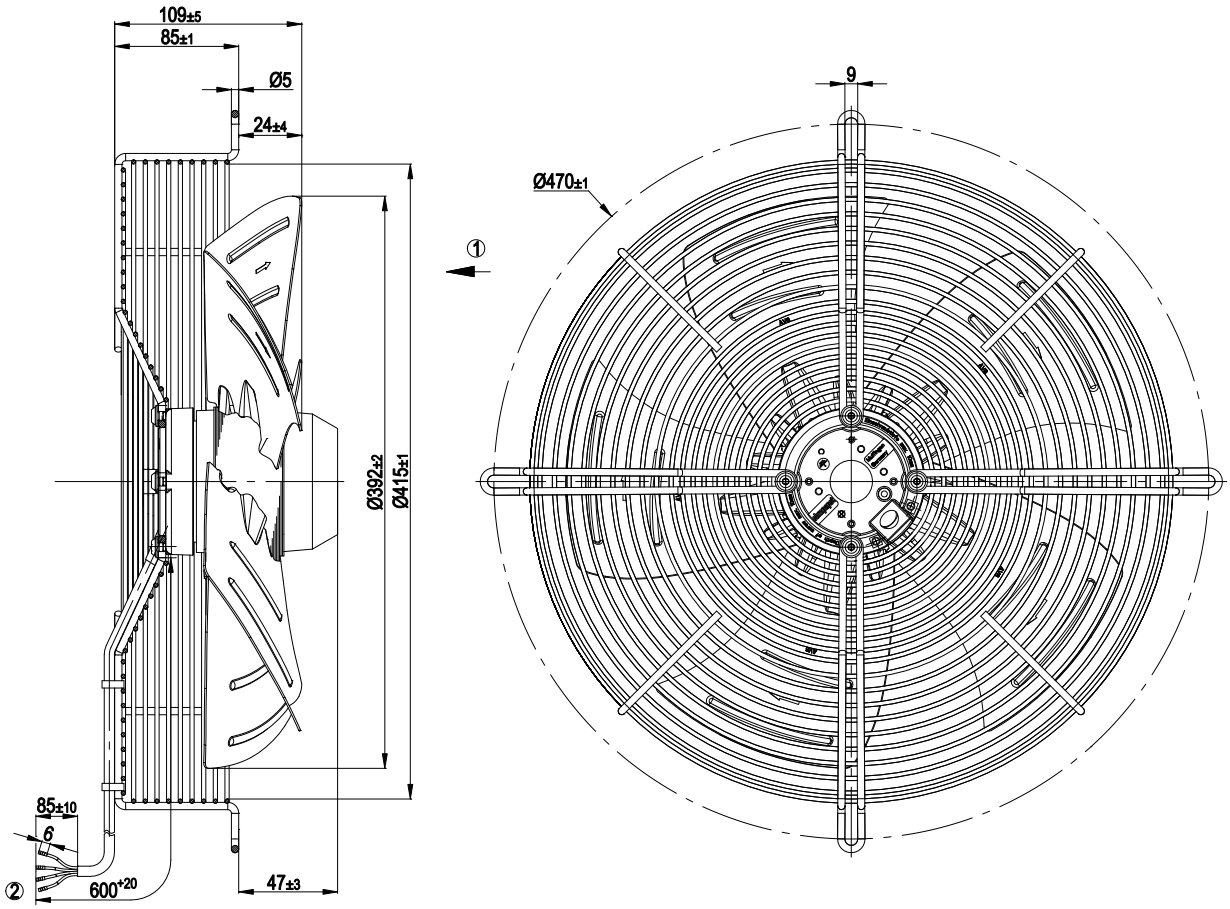

1	Direction of air flow "V"
2	Connection line PVC 4G 0.5 mm², 4 x brass lead tips crimped

Connection screen

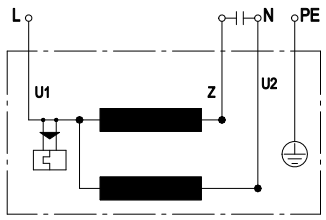

U1	blue	Z	brown	U2	black
PE	green/yellow				

ebmpapst

S4E400-AP02-03

AC axial fan

sickled blades (S series)

with guard grille for short nozzle

Charts: Air flow 50 Hz

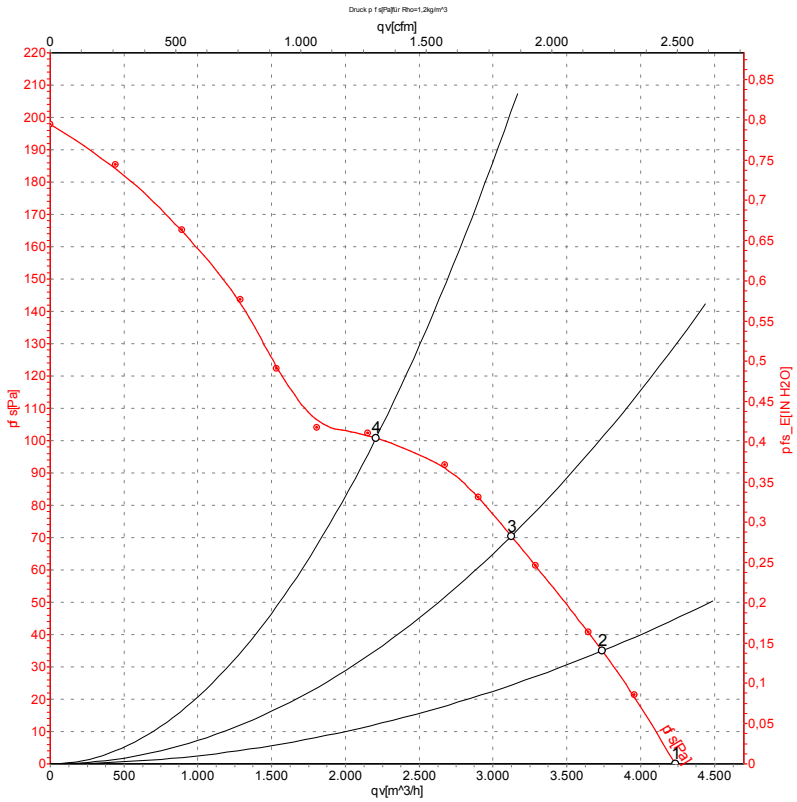

Measurement: LU-30924

Air performance measured as per ISO 5801 Installation category A. For detailed information on the measuring set-up, please contact ebm-papst. Suction-side noise levels: LwA measured as per ISO 13347 / LpA measured with 1m distance to fan axis. The values given are valid under the measuring conditions mentioned above and may vary according to the actual installation situation. With any deviation from the standard set-up, the specific values have to be checked and reviewed with the unit installed.

Measured values

	U	f	n	P_e	I	LpA_{in}	LwA_{in}	qv	p_{fs}
	V	Hz	min^{-1}	W	A	dB(A)	dB(A)	m^3/h	Pa
1	230	50	1430	160	0.73	67	74	4235	0
2	230	50	1425	180	0.81	67	74	3740	35
3	230	50	1405	198	0.88	65	73	3125	70
4	230	50	1380	219	0.97	67	74	2205	100

ebmpapst

S4E400-AP02-03

AC axial fan

sickled blades (S series)

with guard grille for short nozzle

Charts: Air flow 60 Hz

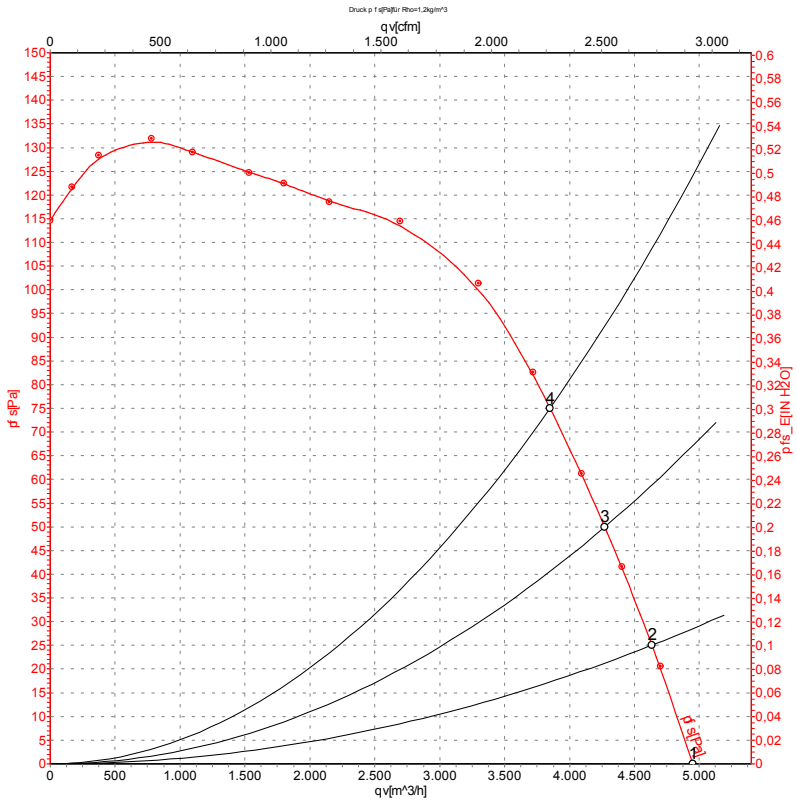

Measurement: LU-30925

Air performance measured as per ISO 5801 Installation category A. For detailed information on the measuring set-up, please contact ebm-papst. Suction-side noise levels: LwA measured as per ISO 13347 / LpA measured with 1m distance to fan axis. The values given are valid under the measuring conditions mentioned above and may vary according to the actual installation situation. With any deviation from the standard set-up, the specific values have to be checked and reviewed with the unit installed.

Measured values

	U	f	n	P_e	I	LpA_{in}	LwA_{in}	qv	p_{fs}
	V	Hz	min^{-1}	W	A	dB(A)	dB(A)	m^3/h	Pa
1	230	60	1700	240	1.06	71	78	4950	0
2	230	60	1675	255	1.13	71	77	4635	25
3	230	60	1645	271	1.19	70	77	4270	50
4	230	60	1620	286	1.25	70	76	3850	75

ebmpapst