JP275/600

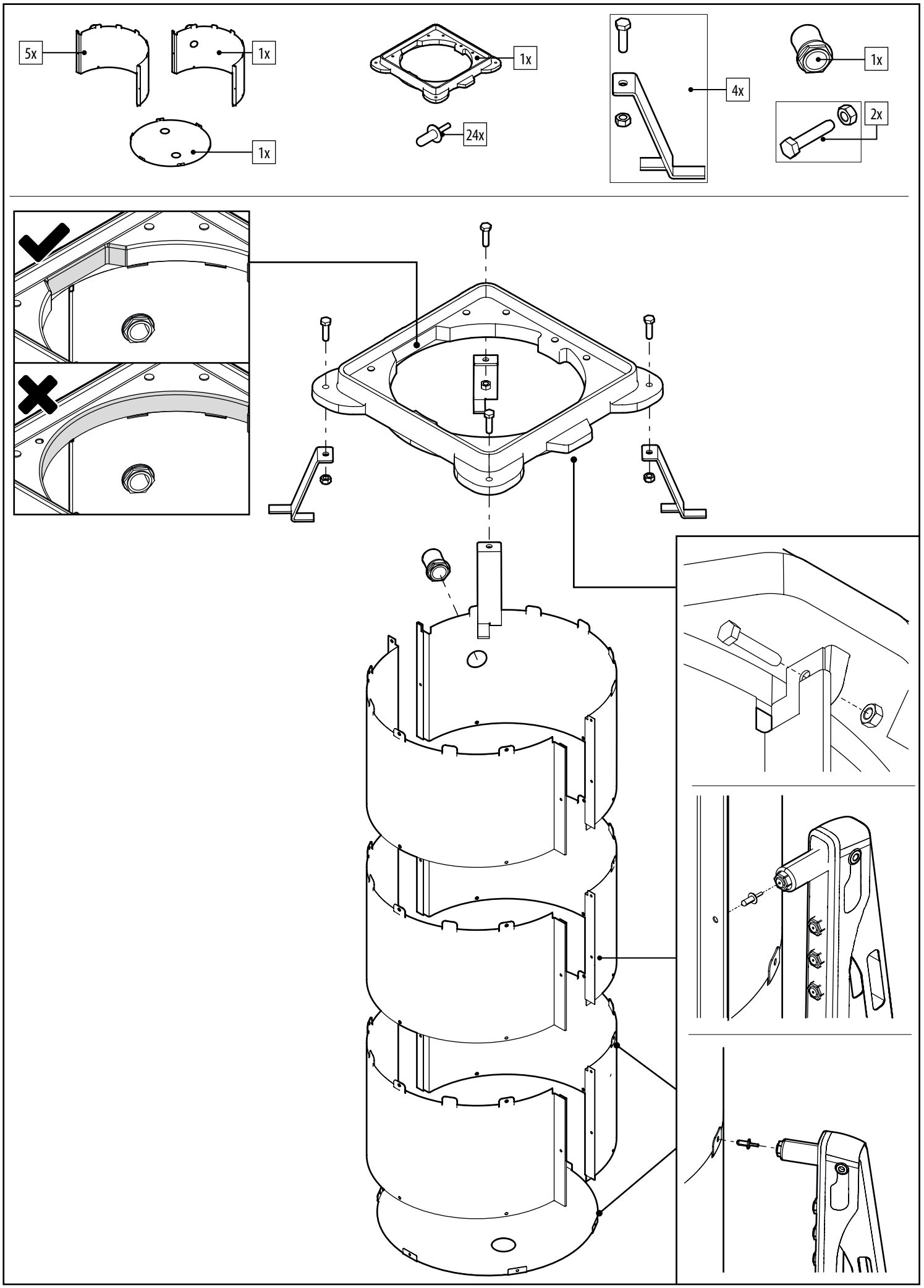
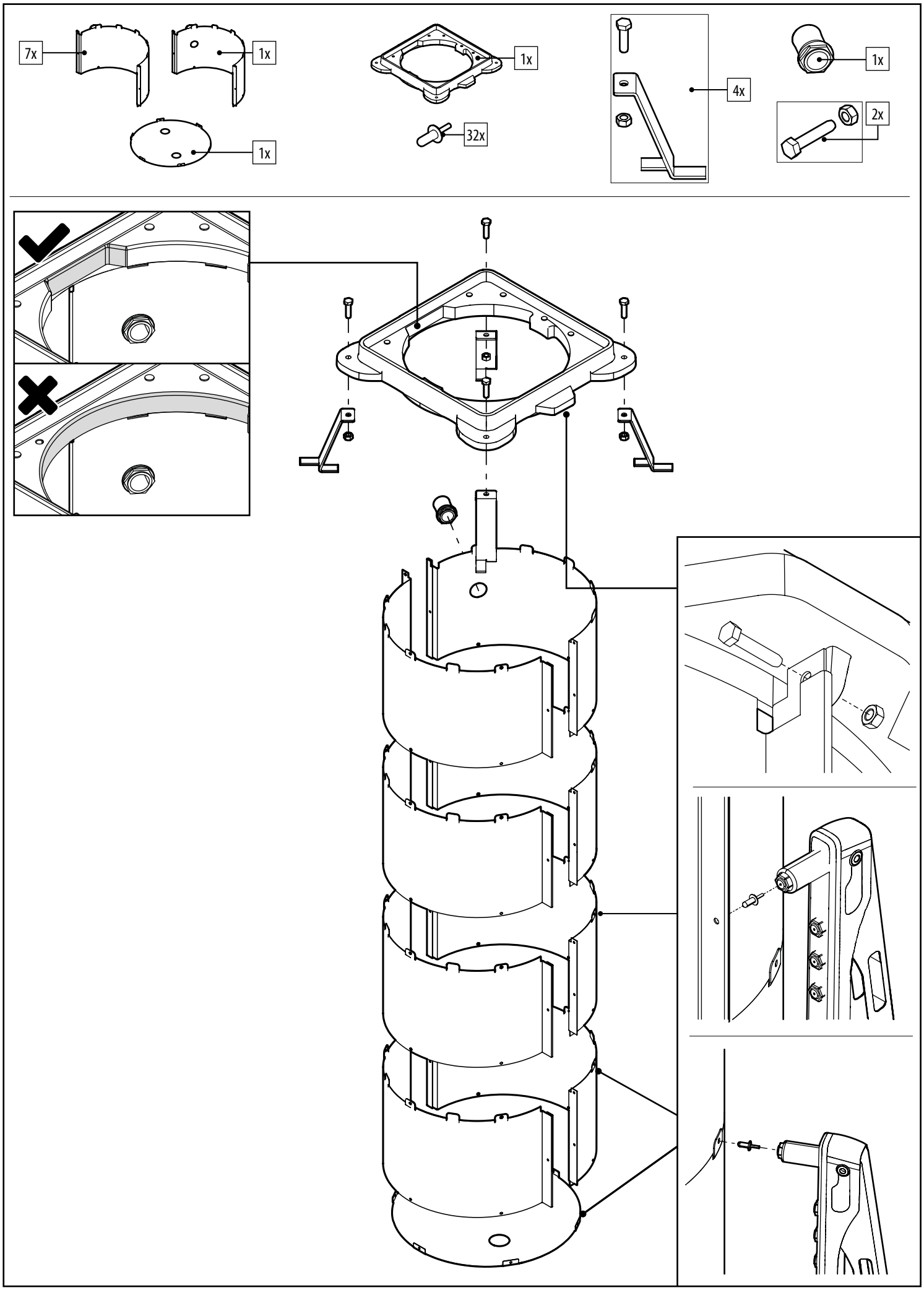
JP275/600 + JP275/800