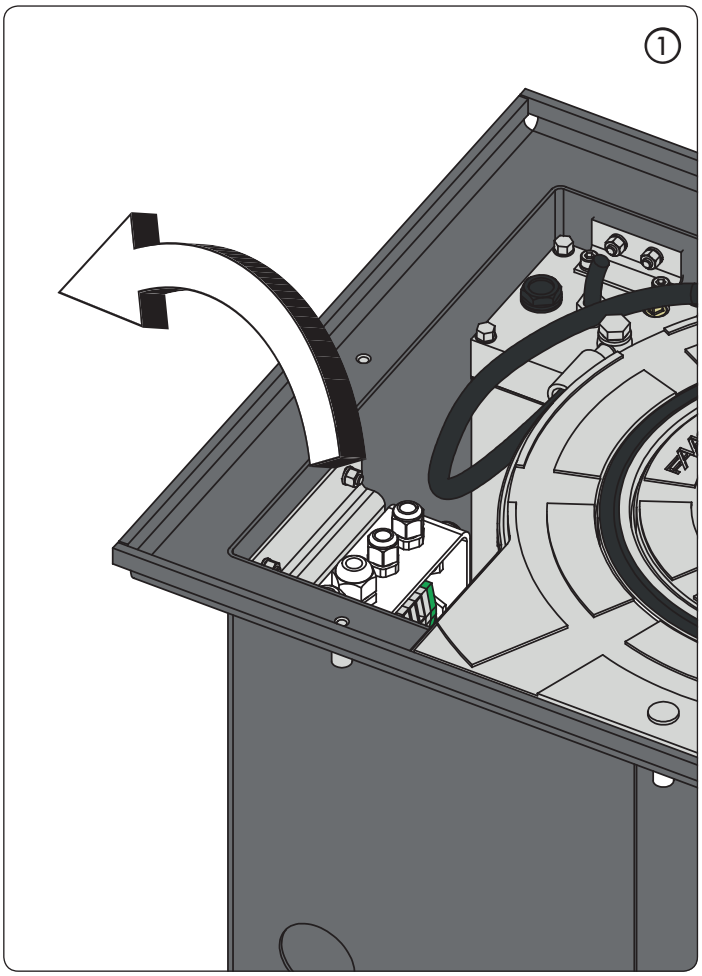
1

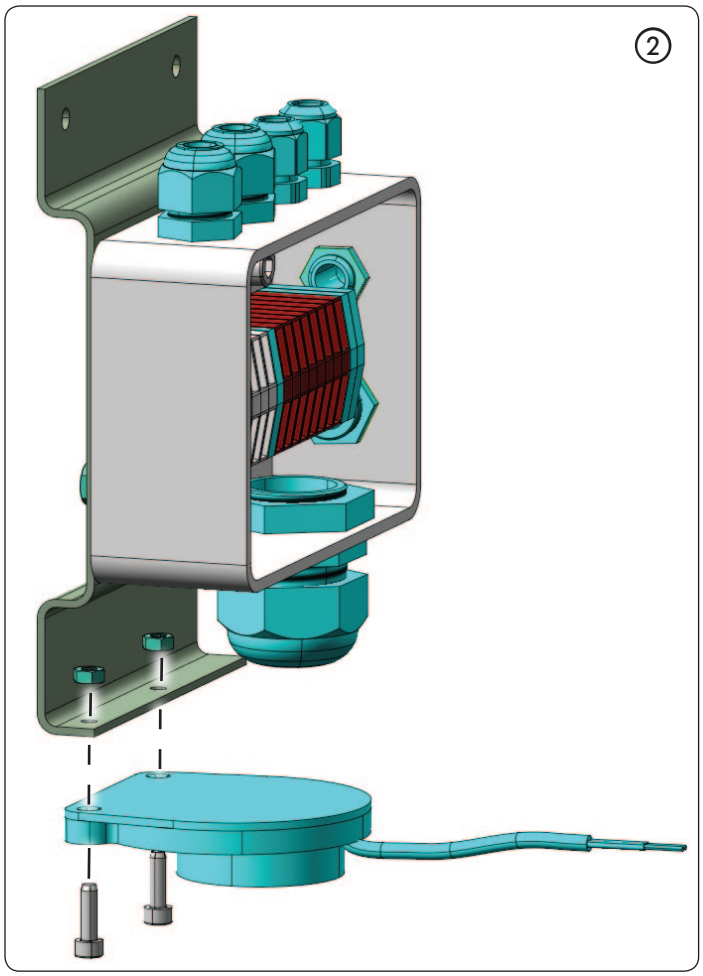
2

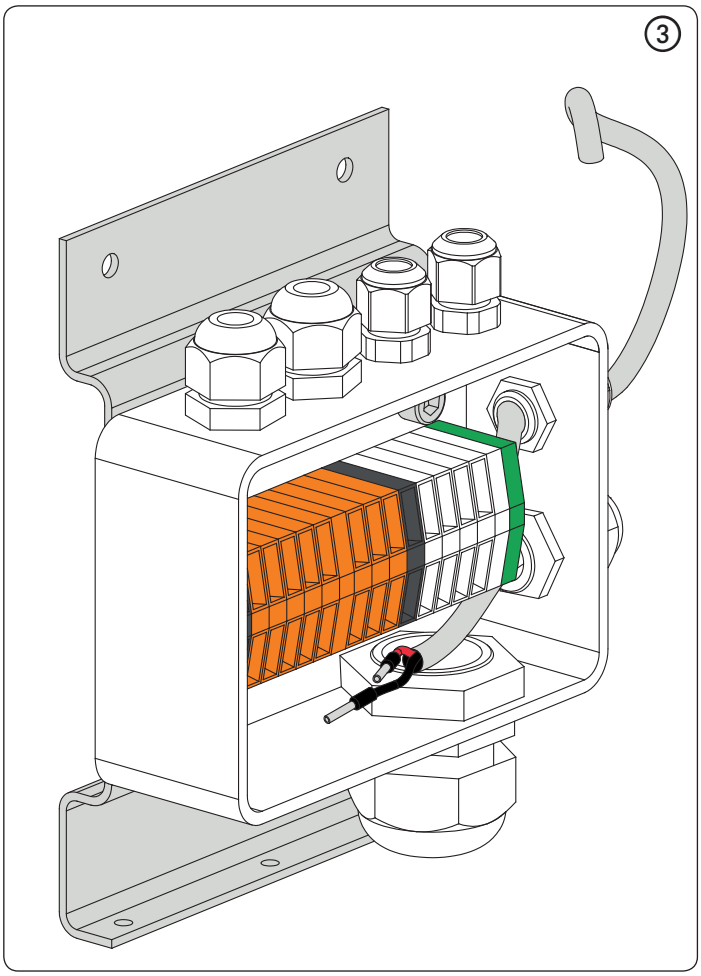
3

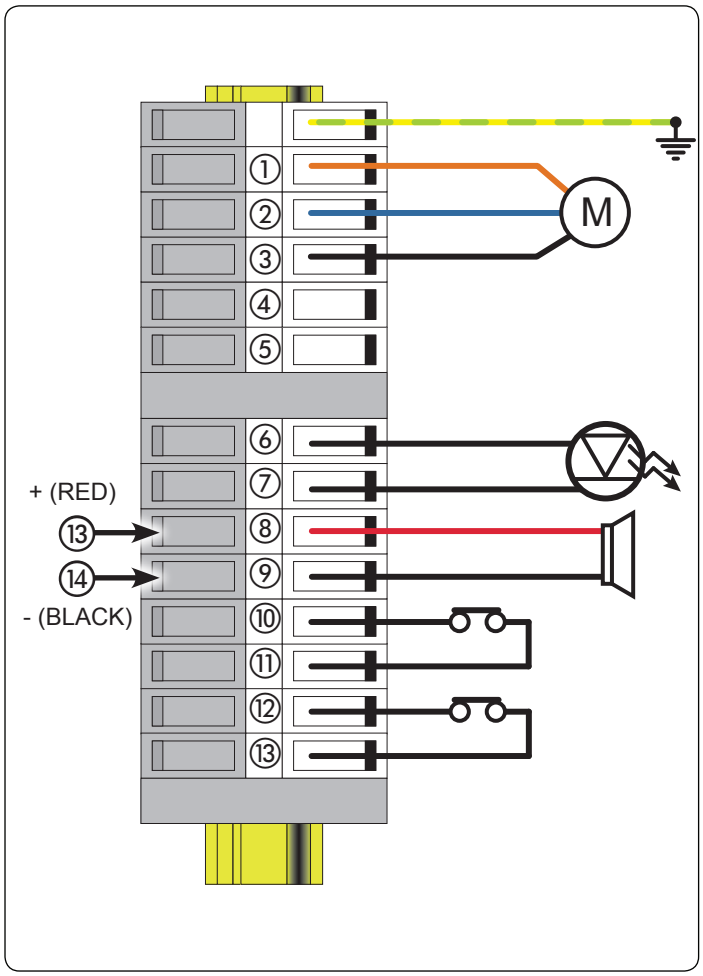
M
+ (RED)
13
14
- (BLACK)
1
2
3
4
5
6
7
8
9
10
11
12
13