ANNA (Manual) XF023

ЭЛЕКТРИЧЕСКИЙ

Вместимость	4 460x330
Расстояние	70 mm
Частота	50 / 60 Hz
Напряжение	230 V~ 1N
Мощность	3,0 kW
Размеры	600x472x587 mm
Вес	22 kg

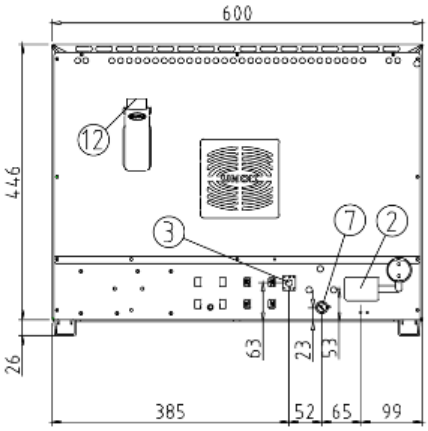
600
446
26
12
3
7
2
63
23
53
385
52
65
99

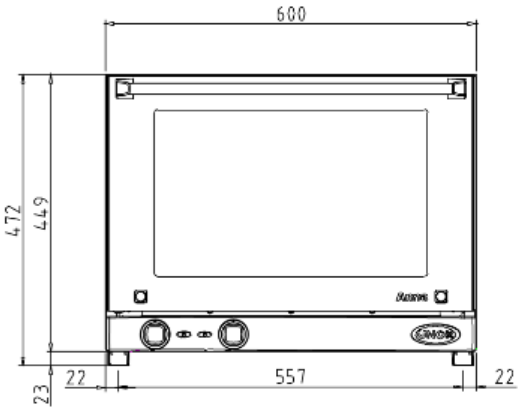
600
472
449
23
22
557
22

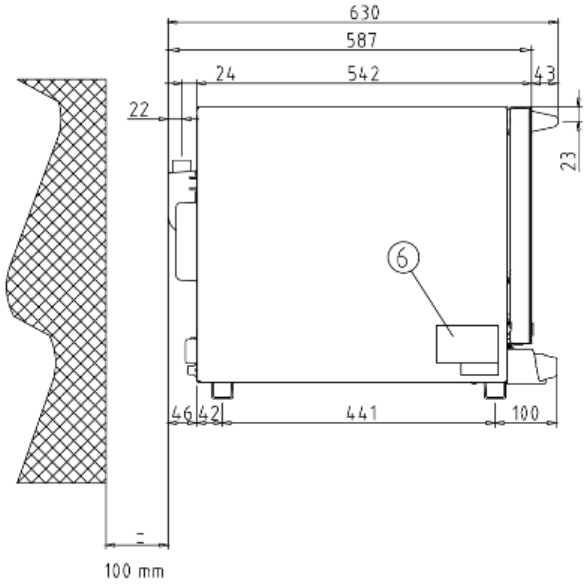
630
587
24
542
43
22
23
6
46
42
441
100
100 mm

■ :Standard □ :Optional - :Not available	ELETTRIC
BAKING MODES	
Convection baking 30 °C - 260 °C	■
AIR DISTRIBUTION IN THE BAKING CHAMBER	
AIR.Plus technology: fan with reversing gear on models 600x400 only	■
CLIMA MANAGEMENT IN THE BAKING CHAMBER	
DRY.Plus technology: high performance moisture and humidity extraction	■
PANS	
Flat aluminum pans (only for 460x330 and 342x242 models)	■
AUXILIARY FUNCTIONS	
Protek.SAFE™ technology: maximum thermal efficiency and working safety (cool door glass and external surfaces)	■
Visualisation of the residual baking time	■
Continuous functioning «INF»	■
Visualisation of the set and real temperature values in the oven chamber	-
Temperature unit that can be set in °C or °F	-
DOOR OPENING	
Manual door opening from top to bottom	■
TECHNICAL DETAILS	
Rounded baking chamber made of high resistant ferritic steel for hygiene and ease of cleaning	■
Baking chamber lights	■
Light weight – heavy duty structure using innovative materials	■
Proximity door contact switch	■ (XF043)
Auto-diagnosys system for problems or brake down	-
Safety temperature switch	■